21.5 inch Panel PC ViTAM-821BR
Stainless steel housing

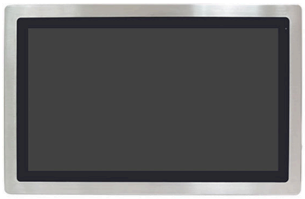

- 21.5" TFT LCD, 1920 x 1080 pixels
- Resistive touch
- Processor: Intel Celeron J6412 (2.0 GHz)
- IP66/IP69K stainless steel housing with M12 connections
- Flush frame design
- Fanless cooling system
- Reading angle horizontal 178°, vertical 178°

https://www.wachendorff-prozesstechnik.de/en/vitam-821br

Description

The ViTAM-8B series is based on an Intel Celeron J6412 (2.0 GHz) processor.
The industrial panel PCs in this series are available in display sizes from 10.1" to 24", with either projected capacitive or resistive touch. The projected capacitive touch enables multi-touch operation with a corresponding operating system. If pressure-sensitive operation is required (e.g. with gloves), the resistive touch is the right choice. The front panels are absolutely flush with the stainless steel housing (type 304). The housing is designed in IP69K (incl. IP66) with M12 connection options. An on/off button is also integrated on the side of the panel PC. The unique fanless thermal design of the robust stainless steel housing enables effective temperature control. The ViTAM IPC can optionally be equipped with a high-brightness LCD and/or optical bonding for an outstanding display, even under the most difficult conditions.

Product details

Power supply:	9 VDC to 36 VDC
Power consumption:	max. 39.34 W
Display:	21.5" TFT LCD
Resolution:	1920 x 1080 pixels
Aspect ratio:	16:9
Brightness:	250 cd/m² 1000 cd/m² (optional High Brightness)
Colors:	16,7 M
Contrast:	1000:1
Reading angle:	H: 178° / V: 178°
Touch screen:	resistive
Processor:	Intel Celeron J6412 (2.0 GHz)
System Chipset:	SoC
RAM:	1 x 260-pin SO-DIMM up to 32GB DDR4 3200MHz
SSD/HDD:	1 x 2.5" SATA3 HDD
Storage space:	1 x M.2 B-Key (SATA 3), standard support for 2242
Interfaces:	USB: 1 x M12 8-pin for USB 2.0 with waterproof termination Serial: 1 x M12 8-pin for COM 1 (RS-232/-422/485, default RS-232) with waterproof termination Ethernet: 1 x M12 A-code, 8-pin, socket (female) for Gigabit Ethernet with waterproof termination Other: 1 x On/Off button (on the side, waterproof) Power supply: 1 x M12, 3-pin for DC with waterproof closure, 1 x on/off switch on the back
Expansion slots:	1 x Mini PCIe slot for 4G/5G module 1 x M.2 E-Key 2230 for WiFi/BT module 1 x Nano SIM card slot
Housing:	Stainless steel (type 304, optionally 316)
Assembly:	VESA 100 x 100; yoke mount (optional)
Protection class:	IP66/IP69K
Weight:	10.05 kg
Dimensions (WxHxD):	571 mm x 362 mm x 55 mm
Ambient conditions:	Operation: 0 °C to +50 °C, optionally -20 °C to 60 °C Storage: -30 °C to +70 °C 10 to 95 % r.h. at 40 °C, non-condensing
Certifications:	CE/FCC class A
Operating systems:	Windows® 10 IoT Windows® 11 IoT
Options:	2 x optional, unpopulated M12 connectors with watertight seal to select two of the following options: 2 x USB 2.0 1 x USB 3.0 1 x LAN 1 x COM RFID module design on the front optional -20 °C to 60 °C
Scope of delivery:	Device 1 x CD (Drivers, User Manual) 1 x M12 plug-in power supply 1 x M12 USB cable (1x M12 to 2x USB 2.0)
Customs tariff number:	84715000
Manufacturer:	Aplex Technology Inc.

Products Order no.

ViTAM-821BR	21.5" resistive touch panel PC, stainless steel

Accessories Order no.	
PPC-Y-121	Stainless steel U-shaped monitor holder for ViTAM IPC and displays
PPC-Y-121S	Stainless steel U-shaped monitor holder for ViTAM IPC and displays
PPC-W-101	VESA wall bracket stainless steel (type 304) 75 x 75 / 100 x 100
PPC-W-101S	VESA wall bracket stainless steel (type 316) 75 x 75 / 100 x 100
KABM12ETH3	M12-A to RJ45, shielded, L=3m
KABM12ETH5	M12-A to RJ45, shielded, L=5m
KABM12ETH10	M12-A to RJ45, shielded, L=10m

Drawings

Dimensions (mm):

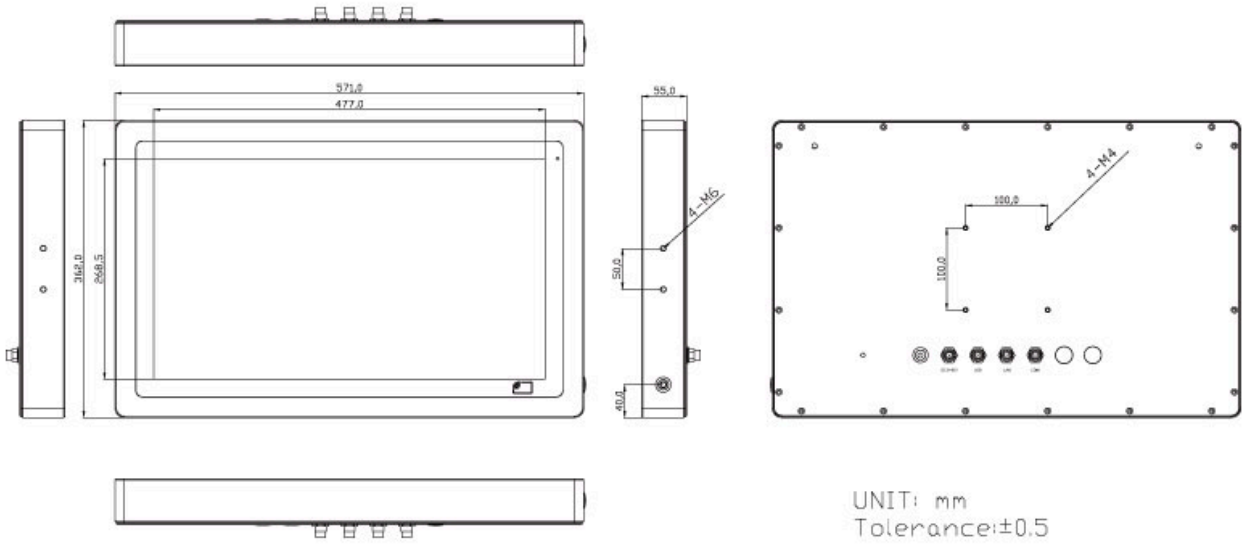

Drawings

LAN cable

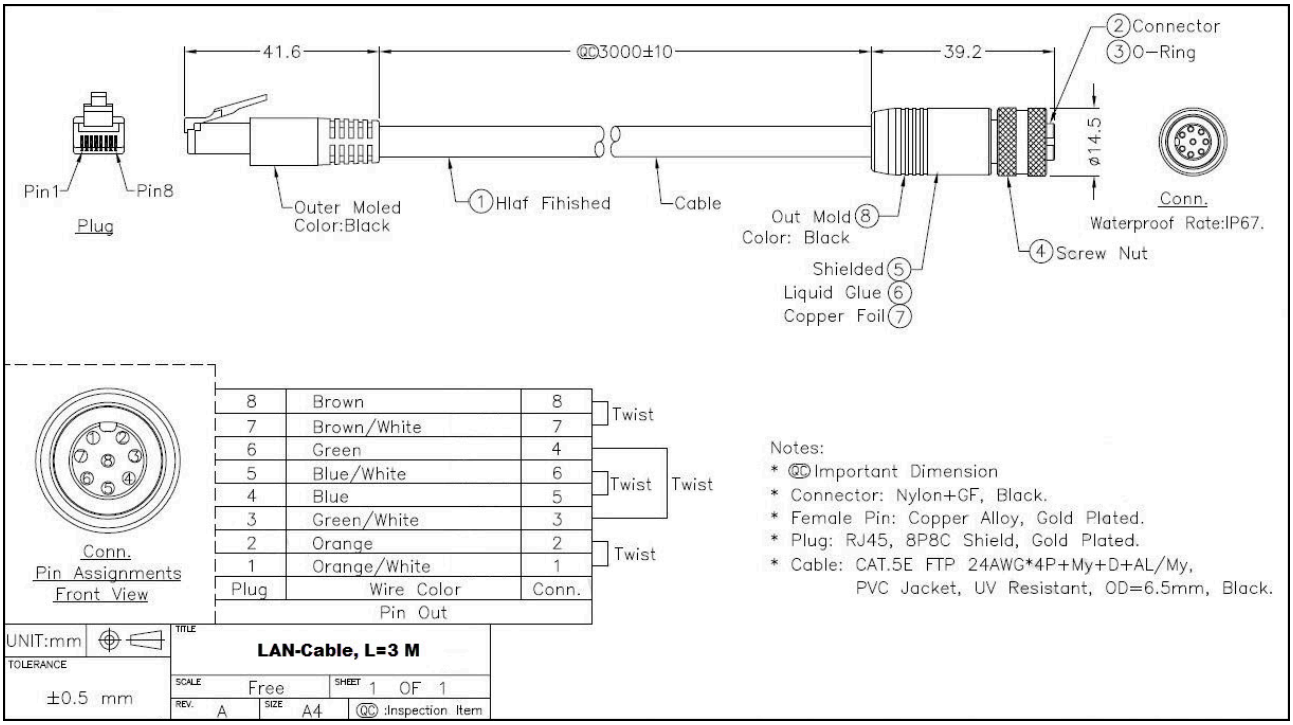

(may not be included in the scope of delivery)

Drawings

USB 3.0 cable

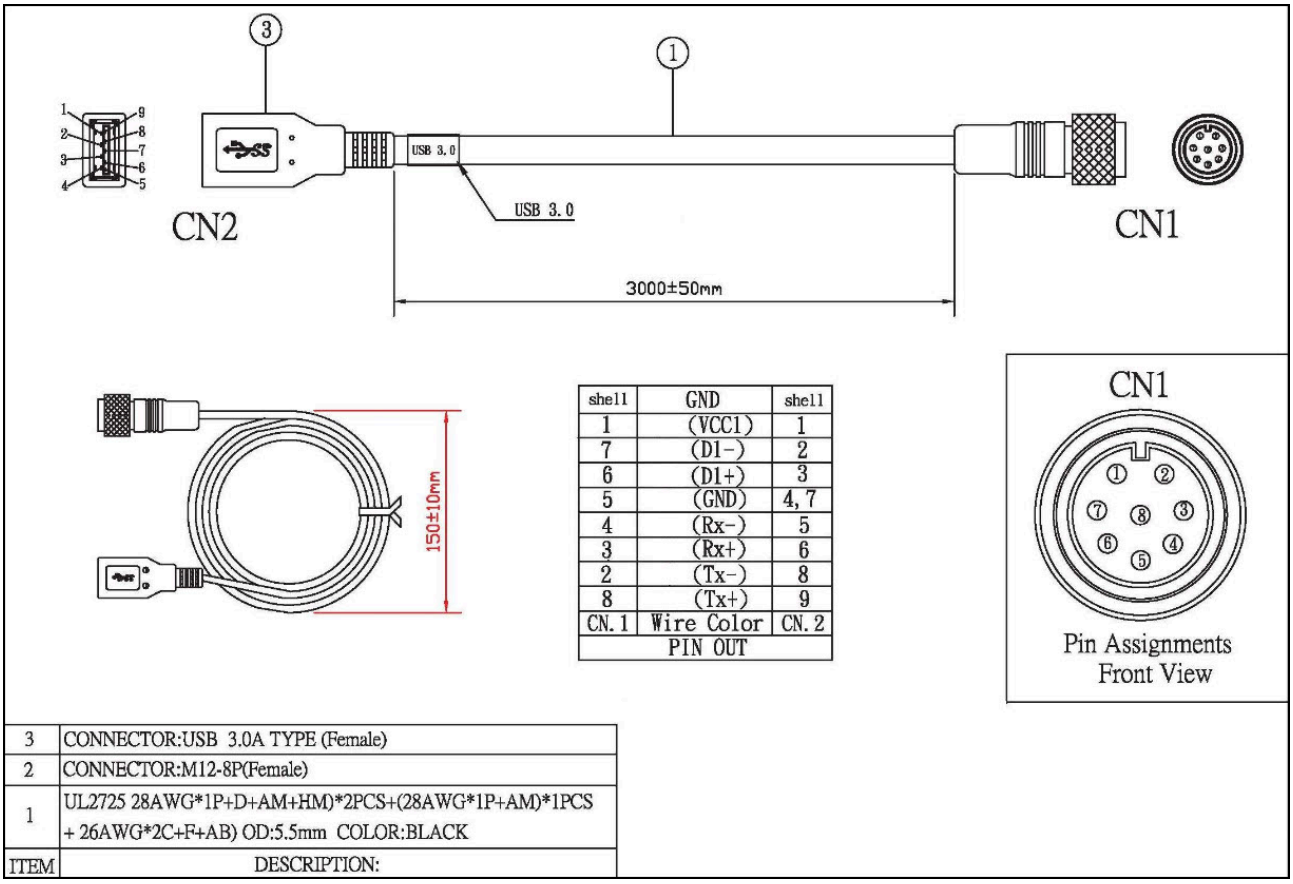

shell	GND	shell
1	(VCC1)	1
7	(D1-)	2
6	(D1+)	3
5	(GND)	4, 7
4	(Rx-)	5
3	(Rx+)	6
2	(Tx-)	8
8	(Tx+)	9
CN. 1	Wire Color	CN. 2
PIN OUT		

ITEM	DESCRIPTION:
3	CONNECTOR:USB 3.0A TYPE (Female)
2	CONNECTOR:M12-8P(Female)
1	UL2725 28AWG*1P+D+AM+HM)*2PCS+(28AWG*1P+AM)*1PCS + 26AWG*2C+F+AB) OD:5.5mm COLOR:BLACK

(may not be included in the scope of delivery)

Drawings

USB Y-cable

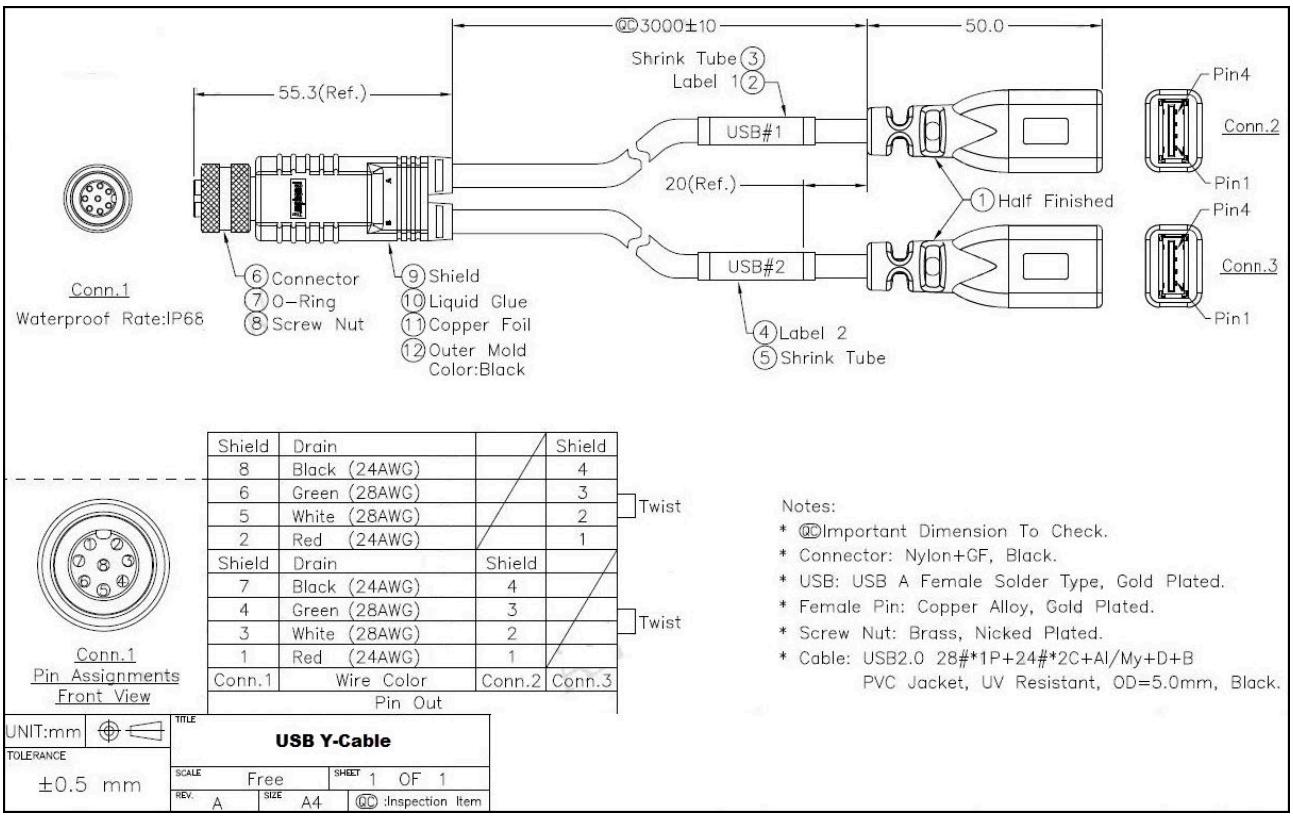

Shield	Drain		Shield
8	Black (24AWG)		4
6	Green (28AWG)		3
5	White (28AWG)		2
2	Red (24AWG)		1
Shield	Drain	Shield	
7	Black (24AWG)	4	
4	Green (28AWG)	3	
3	White (28AWG)	2	
1	Red (24AWG)	1	
Conn.1	Wire Color	Conn.2	Conn.3

Pin Out

(may not be included in the scope of delivery)

Drawings

COM cable

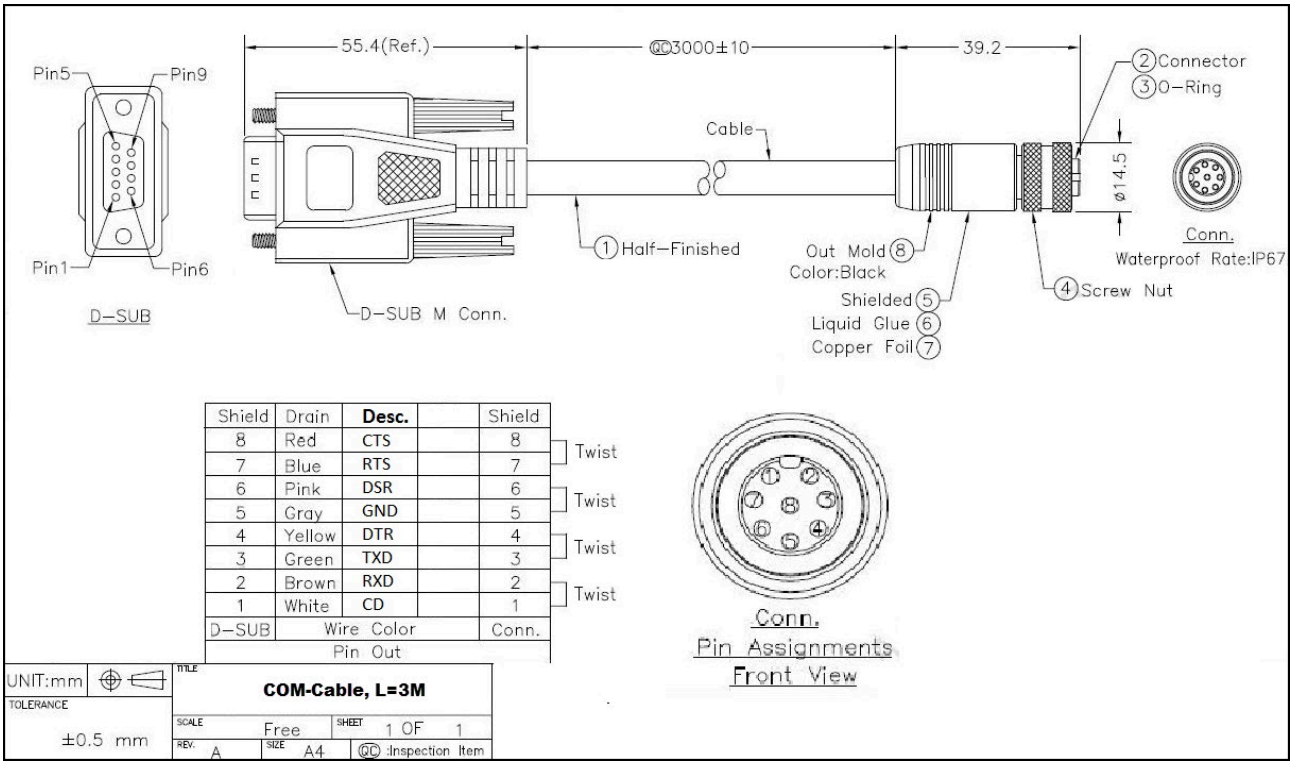

(may not be included in the scope of delivery)

Drawings

Power adapter

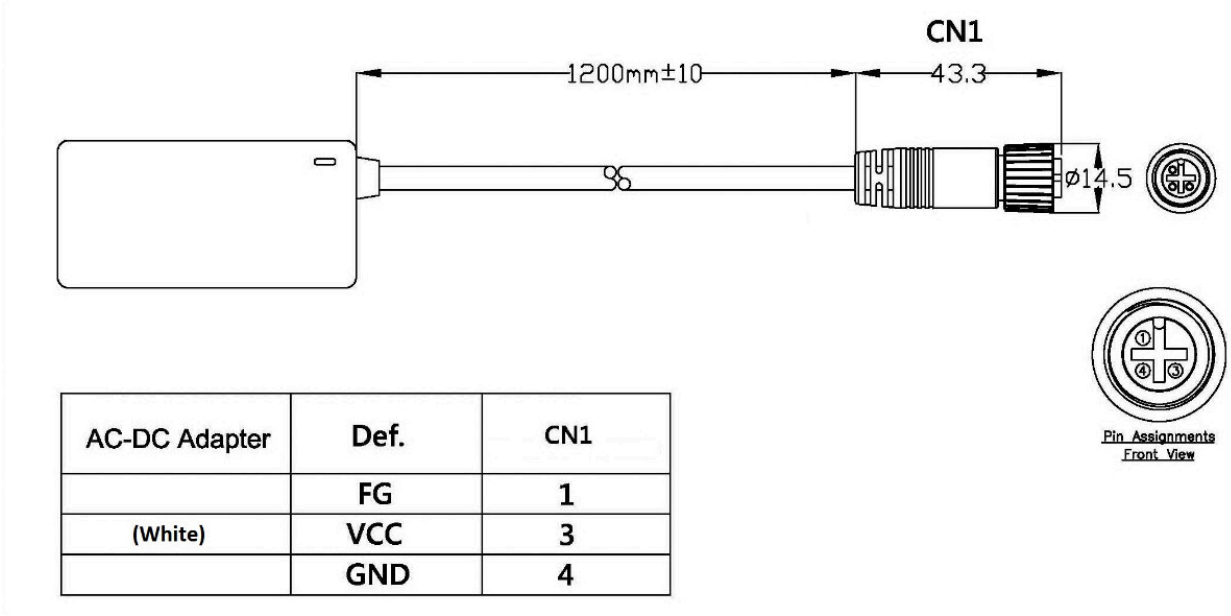

AC-DC Adapter	Def.	CN1
	FG	1
(White)	VCC	3
	GND	4

(may not be included in the scope of delivery)

WACHENDORFF
Prozesstechnik GmbH & Co. KG

Wachendorff Prozesstechnik GmbH & Co. KG
Industriestrasse 7 • 65366 Geisenheim
Germany

Phone: +49 (0) 67 22 / 99 65 - 20
E-Mail: wp@wachendorff.de
www.wachendorff-prozesstechnik.de