WACHENDORFF
Prozesstechnik GmbH & Co. KG

DIN rail power supply DRAN30-24

- Single-phase input: 85 VAC to 264 VAC
- Output: 24 VDC to 61 °C
- Output power of 30 watts (1.25 A)
- Robust plastic housing with top-hat rail mounting

https://www.wachendorff-prozesstechnik.de/en/DRAN30-24

Description

The DRAN30-24 power supply units are high-quality switched-mode power supply units for DIN rail mounting. They impress with their compact and intelligent design as well as their robust plastic housing. The output voltage is easy and simple to adjust (24 VDC to 28 VDC) and is highly stable even with temperature fluctuations and load changes.
In addition to short-circuit protection, overload and overvoltage protection at the output also ensure a high level of safety.

Product details

Input voltage range:	85 VAC to 264 VAC
Nominal input voltage:	100 VAC to 240 VAC or 90 to 375 VDC
Inrush current:	(115 /230 VAC): 20/40 A
Input current:	(115 /230 VAC): 560 mA / 330 mA
Internal fuse:	T 2 A / 250 VAC
Output voltage:	Factory setting +/-1 %: 24 VDC
Output voltage adjustment range:	24 VDC to 28 VDC
Switch-on delay:	after applying the supply: 1 sec (max.)
Isolation:	Input/output insulation voltage: 3,000 VAC Insulation voltage input/PE: 1,500 VAC Insulation voltage output/PE: 500 VAC
Continuous current:	at 24 VDC < 25 °C (In): 1.25 A (permanent) at 28 VDC < 25 °C (In): 1.05 A
Hold-up time:	at 115/230 VAC and 25 °C : typically 20/30 milliseconds
Ripple:	≤ 50 mVpp
efficiency:	≥ 86 % (230 VAC)
Maximum power loss:	5.5 watts at 25 °C (230 VAC)
Overload protection:	110 to 160 %
Short-circuit protection:	Fold-forward mode
Overvoltage protection:	Auto recovery with 30 to 33 VDC

Standards and approvals:	UL 508 Listed / UL 60950-1 Recognized, ISA 12.12.01 UL 1310 Class 2 Power TÜV EN 60950-1, EN61558-1, EN 61558-2-16 EN 61000-6-3, EN 55022 Class B EN 61000-3-2, EN 61000-3-3 EN 61000-6-2, EN 55024 EN 61000-4-2, -3, -4, -5, -6, -8, -11 EN 61204-3, ENV 50204
Reliability:	MTBF 665,000 hours
Protection class:	IP20
Housing:	Sturdy plastic housing. Mounting on the top-hat rail.
Dimensions (WxHxD):	40.5 mm x 90 mm x 114 mm
Connection:	Screw terminals: AWG26-12 with 0.2 to 2.5 mm² cross-section Spring terminals: AWG24-14 with 0.2 to 2 mm² cross-section
Relative humidity:	max. 95 % rH at 25 °C, non-condensing.
Ambient temperature:	Operation: -40 °C to +71 °C (> 61 °C leads to a reduction of the operating values by 2.5 % / °C) Storage: -40 °C to +85 °C.
Weight:	approx. 270 g
Scope of delivery:	Device, operating instructions.
Manufacturer:	Chinfa Electronics Ind. Co, Ltd.

Products Order no.

DRAN30-24	Power supply unit for top-hat rail, 90 to 264 VAC, 24 VDC 1.25 A, spring terminal
DRAN30-24A	Power supply unit for top-hat rail, 85 to 264 VAC, 24 VDC 1.25 A, screw terminal

Drawings

Dimensions

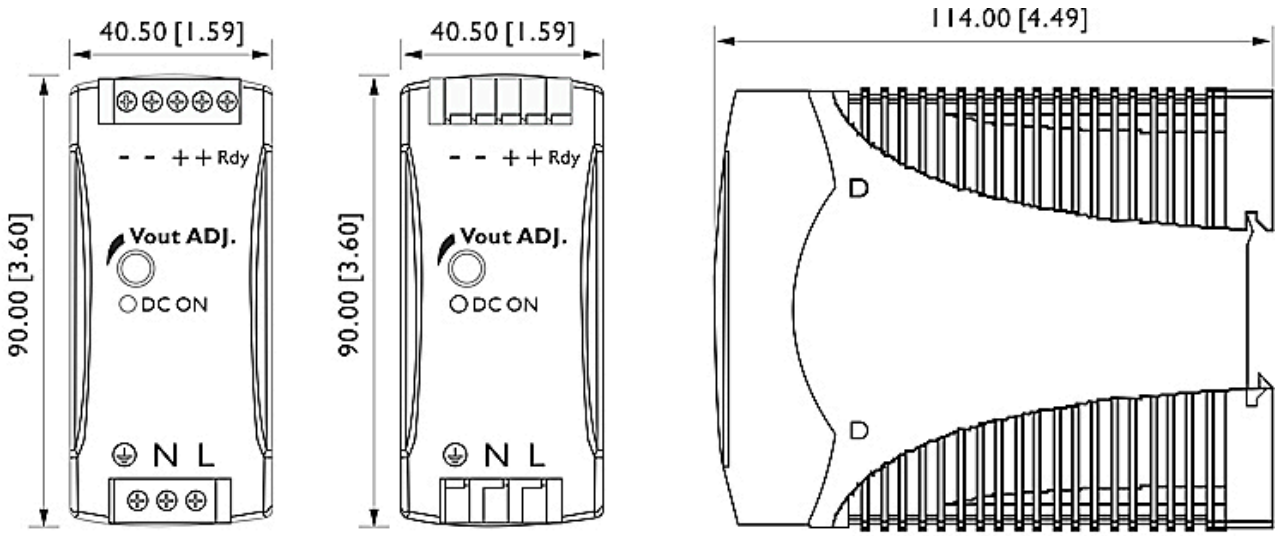

Abmessungen in mm [Inch]

WACHENDORFF
Prozesstechnik GmbH & Co. KG

Wachendorff Prozesstechnik GmbH & Co. KG
Industriestrasse 7 • 65366 Geisenheim
Germany

Phone: +49 (0) 67 22 / 99 65 - 20
E-Mail: wp@wachendorff.de
www.wachendorff-prozesstechnik.de