Relay output module 4x NO contact

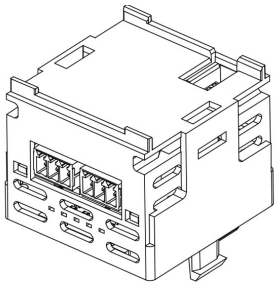

Relay output module for the PM-50 base unit

- 4x relay with NO contact
- 3 A at 250 VAC or 30 VDC; resistive load
- Removable terminal strip

https://www.wachendorff-prozesstechnik.de/PMM000I0RL400000

Description
The relay output module expands the PM-50 graphic display quickly and easily with additional switching outputs (4x NO contacts).

Product details	
Outputs:	4 x NO contact
Details:	Type: Form A relay Switching capacity: 3 A at 250 VAC or 30 VDC; resistive load When all relays are active, the maximum current is 1A per relay. The 4 NO relays are divided into 2 relay groups: Relay group 1 = relay 1 and relay 2, with common ground Relay group 2 = relay 3 and relay 4, with common earth Insulation: 3000 Vrms for 1 min. Note: If the relay contacts are connected to the mains supply, the mains supply must be overvoltage category II, polarity reversal degree 2.
Life expectancy:	At least 100,000 cycles at full load. An external protective circuit using RC elements extends the service life of the relays.
Connections:	Spring clamp up to 16 AWG (1.31 mm²) Length of wire section: 8 mm to 9 mm (0.32" to 0.35")
Power supply:	Via the PM-50 base module Maximum power 0.9 W
Weight:	51,0 g
Operating temperature:	-10 °C to + 55°C
Relative humidity:	0 % to 85 %, non-condensing
Protection class:	IP25
Dimensions (WxHxD):	44.8 mm x 44.8 mm x 34.1 mm

Note:	**Each expansion module (RS232, Ethernet, analog output, relay, AC power supply) can only be plugged in / installed once.**
Manufacturer:	Red Lion

Products Order no.	
PMM000I0RL400000	Relay output module for PM-50; 4x NC/NO contact

Drawings

Dimensions in inches (mm)

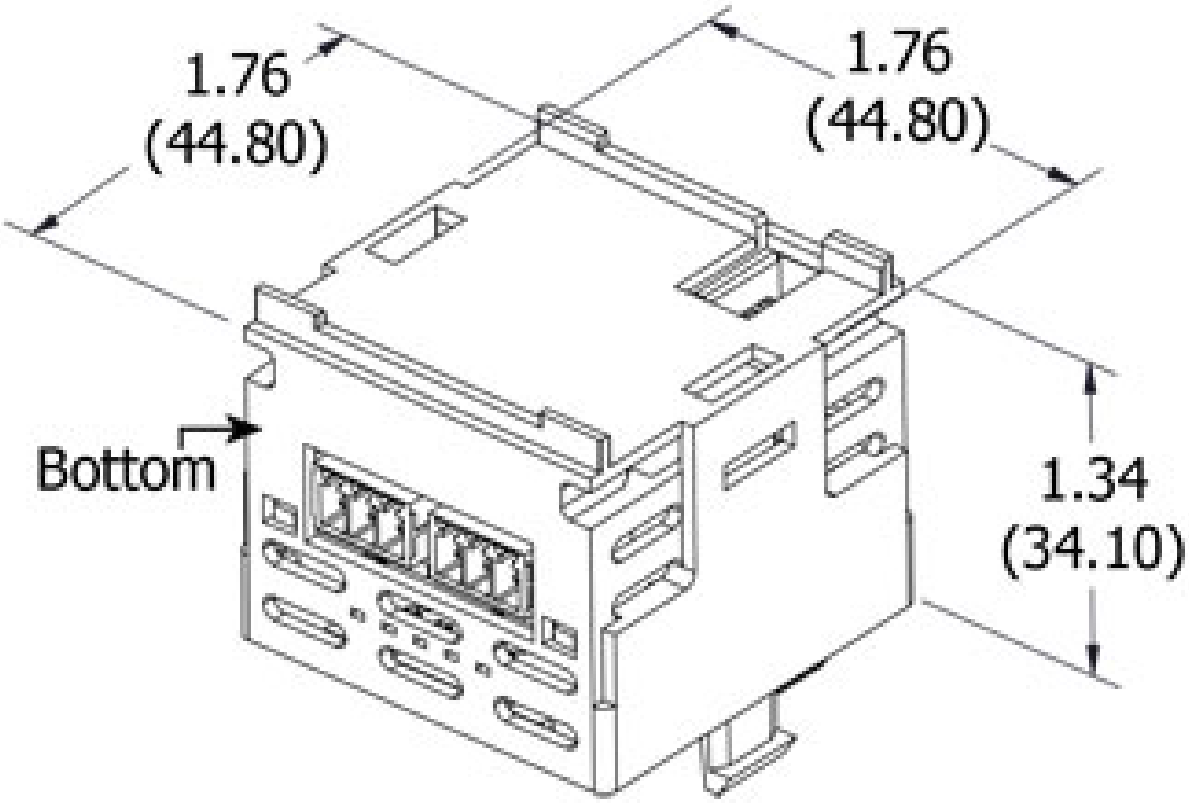

Drawings

Terminal and LED meaning

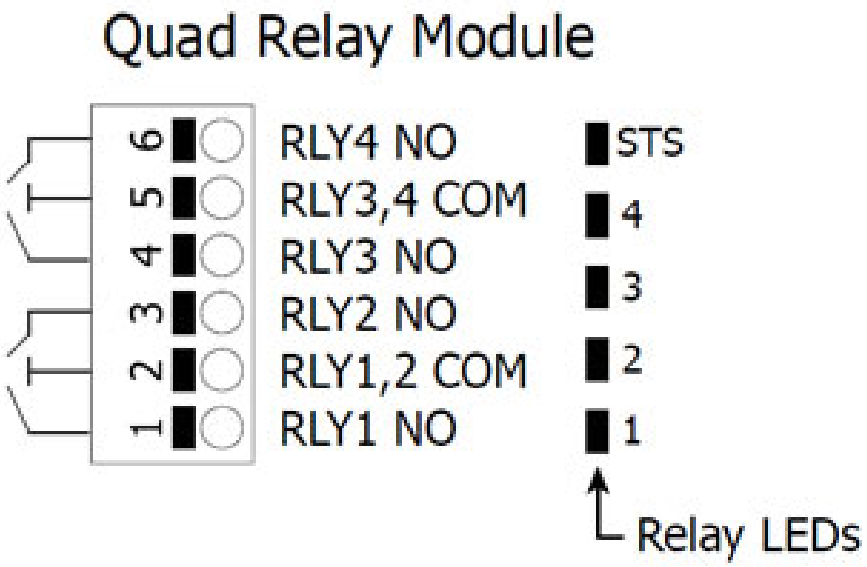

Module Status (STS) LED

LED/STATE	MEANING
Fast blink	Module is initializing.
Solid	Module is running normally.

Relay LEDs

LED/STATE	MEANING
Solid	Relay is active.
OFF	Relay is inactive.

Relaisausgangsmodul_4xOEffner_Schliesser.dwg

WACHENDORFF
Prozesstechnik GmbH & Co. KG

Wachendorff Prozesstechnik GmbH & Co. KG
Industriestrasse 7 • 65366 Geisenheim
Germany

Phone: +49 (0) 67 22 / 99 65 - 20
E-Mail: wp@wachendorff.de
www.wachendorff-prozesstechnik.de