# Mobile radio antenna WEW40902F

- External omnidirectional mobile radio antenna
- Compact, space-saving design
- Mounting in 20.5 mm hole in the control cabinet or with mounting bracket
- 5 m connection cable with SMA plug
- Gain 3-4 dBi (depending on frequency range)
- Optional mounting bracket (available separately)

**https://www.wachendorff-prozesstechnik.de/en/WEW40902F**

| Description |
|---|
| Omnidirectional mobile radio antenna with connection cable for mobile radio modems and routers. Space-saving and compact design. The antenna can either be screwed directly into a 20.5 mm hole in the control cabinet or mounted using the optional mounting bracket. The gain is 3-4 dBi. |

| Product details | |
|---|---|
| Interfaces: | 1x SMA plug |
| Cable length: | 5 meters |
| Frequency ranges: | 806 to 960 MHz<br>1710 to 2500 MHz |
| Antenna gain: | 3 dBi (at 806 to 960 MHz)<br>4 dBi (at 1710 to 2500 MHz) |
| Impedance: | 50 Ohm |
| Art: | Omnidirectional antenna |
| Weight: | < 300 g |
| Dimensions: | H x W: 46 mm x Ø 38mm |
| Protection class: | IP66 |
| Ambient temperature: | Operation: -40 °C to +70 °C<br>Storage: -40 °C to +70 °C |
| Assembly: | The antenna is mounted on a base plate. To do this, it is necessary to feed the base unit of the antenna with cable from the underside of the plate (max. thickness 1.6 mm) through a 20.5 mm hole. Screw on the brass reducing ring with the O-ring from above and tighten. Then screw on the antenna including the rubber seal. |

| Products Order no. | |
|---|---|
| WEW40902F | Omnidirectional mobile radio antenna GSM, 2G/GPRS, 3G/UMTS/HSPA with 5 m connection cable |

| Accessories Order no. | |
|---|---|
| WEW40902W | Mounting bracket for WEW40902F |
| ECCAIRC01 | Extension cable mobile phone antenna 1 meter |
| ECCAIRC03 | Extension cable for mobile phone antenna 3 meters |
| ECCAIRC05 | Mobile phone antenna extension cable 5 meters |

## Drawings

### Antenna dimensions

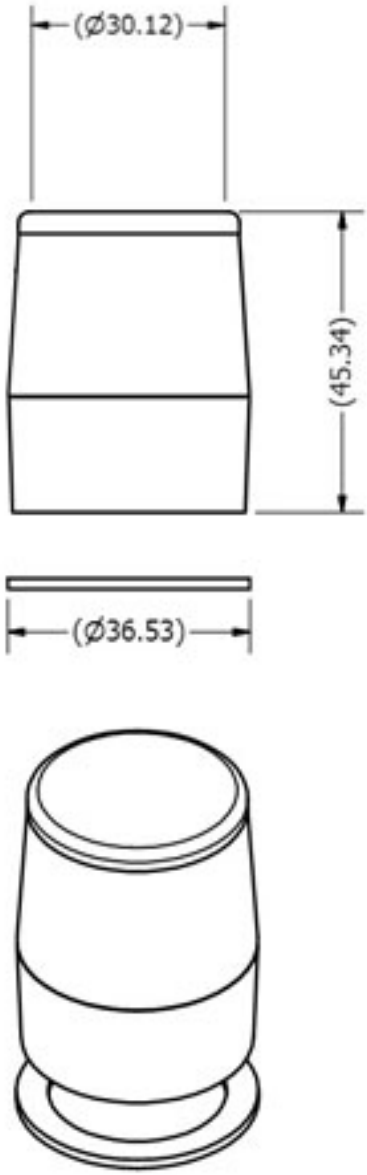

## Drawings

### Mounting bracket dimensions

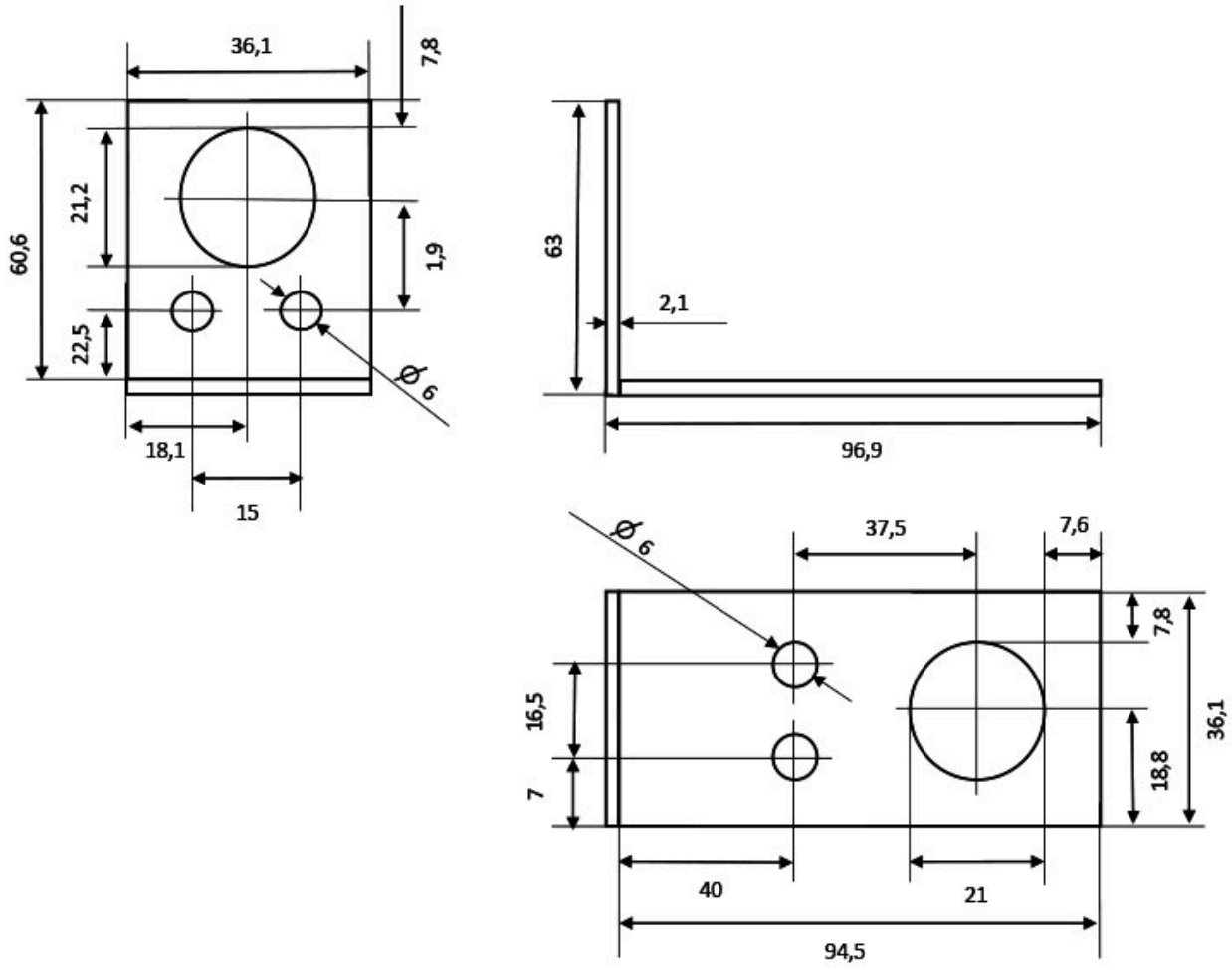

WACHENDORFF
Prozesstechnik GmbH & Co. KG

Wachendorff Prozesstechnik GmbH & Co. KG
Industriestrasse 7 • 65366 Geisenheim
Germany

Phone: +49 (0) 67 22 / 99 65 - 20
E-Mail: wp@wachendorff.de
www.wachendorff-prozesstechnik.de