WACHENDORFF
Prozesstechnik GmbH & Co. KG

15.6" industrial display ViTAM-116R
Stainless steel housing

- 15.6" TFT LCD, 1366 x 768 pixels
- resistive touch
- IP66/IP69K stainless steel housing
- flush-mounted design
- Fanless cooling system
- Reading angle horizontal 160°, vertical 160

https://www.wachendorff-prozesstechnik.de/en/ViTAM-116R

Description

The ViTAM series offers extremely robust industrial displays in a flush-mounted stainless steel housing with IP66/IP69K certification.
The industrial touch displays in this series are available in display sizes from 10.1" to 23.8", with either projected capacitive or resistive touch. The series is supplemented by displays without touch functionality. The projected capacitive touch enables multi-touch operation. If pressure-sensitive operation is required (e.g. with gloves), the resistive touch is the right choice. The front panels are absolutely flush with the stainless steel housing (type 304, optionally 316). The robust housing is designed in IP66/IP69K with M12 connection options. The unique fanless design enables effective temperature control and use in the food sector or laboratories. The touch displays of the ViTAM series can optionally be equipped with a high-brightness display and optical bonding for an outstanding display, even under difficult conditions.

Product details

Power supply:	9 VDC to 36 VDC
Power consumption:	max. 12.3 W max. 15 W (optional high-brightness LCD)
Display:	15.6" TFT LCD
Resolution:	1366 x 768 pixels
Aspect ratio:	16:9
Brightness:	350 cd/m² 1,000 cd/m² (optional high-brightness LCD)
Colors:	16.7 million
Reading angle:	H: 160° / V: 160°
Touch screen:	resistive touch
Interfaces:	Touch: 1x M12 8-pin USB 2.0 VGA: 1 x M12 12-pin with waterproof cover HDMI: 1x with waterproof cover OSD: Control membrane (rear) Power supply: 1 x M12 3-pin with waterproof cover
Housing:	Stainless steel (type 304, optionally 316)
Assembly:	VESA 75 x 75; yoke mount (swivel fork mount)
Protection class:	IP66/IP69K
Dimensions (WxHxD):	440 mm x 290 mm x 55 mm
Weight:	approx. 6.4 kg

Ambient conditions:	Operation: 0 °C to +50 °C Storage: -30 °C to +70 °C 10 % to 90 %.rH at 40 °C, non-condensing
Certifications:	CE/FCC Class A
Scope of delivery:	Device 1 x M12 power supply unit 1 x M12 to VGA cable, 2 m
Customs tariff number:	85285210
Manufacturer:	Aplex Technology Inc.
Options:	IP65 water-resistant power supply unit (24 VDC / 90-305 VAC) Optical bonding High-brightness LCD (1000 cd/m2) Stainless steel (Type 316) 2 W loudspeaker (IP65) Auto-dimming function M12 to USB 2.0 type A cable, 2 m HDMI cable, 2 m

Products Order no.

ViTAM-116R	15.6" industrial display, stainless steel, resistive touch

Accessories Order no.

PPC-Y-116	Stainless steel U-shaped monitor holder for ViTAM IPC and displays
PPC-Y-116S	Stainless steel U-shaped monitor holder for ViTAM IPC and displays
PPC-D-103	VESA stand stainless steel (type 304) 75 x 75 / 100 x 100
PPC-Y-100	Stainless steel U-shaped monitor holder for ViTAM IPC and displays

Drawings

Dimensions (mm) 01:

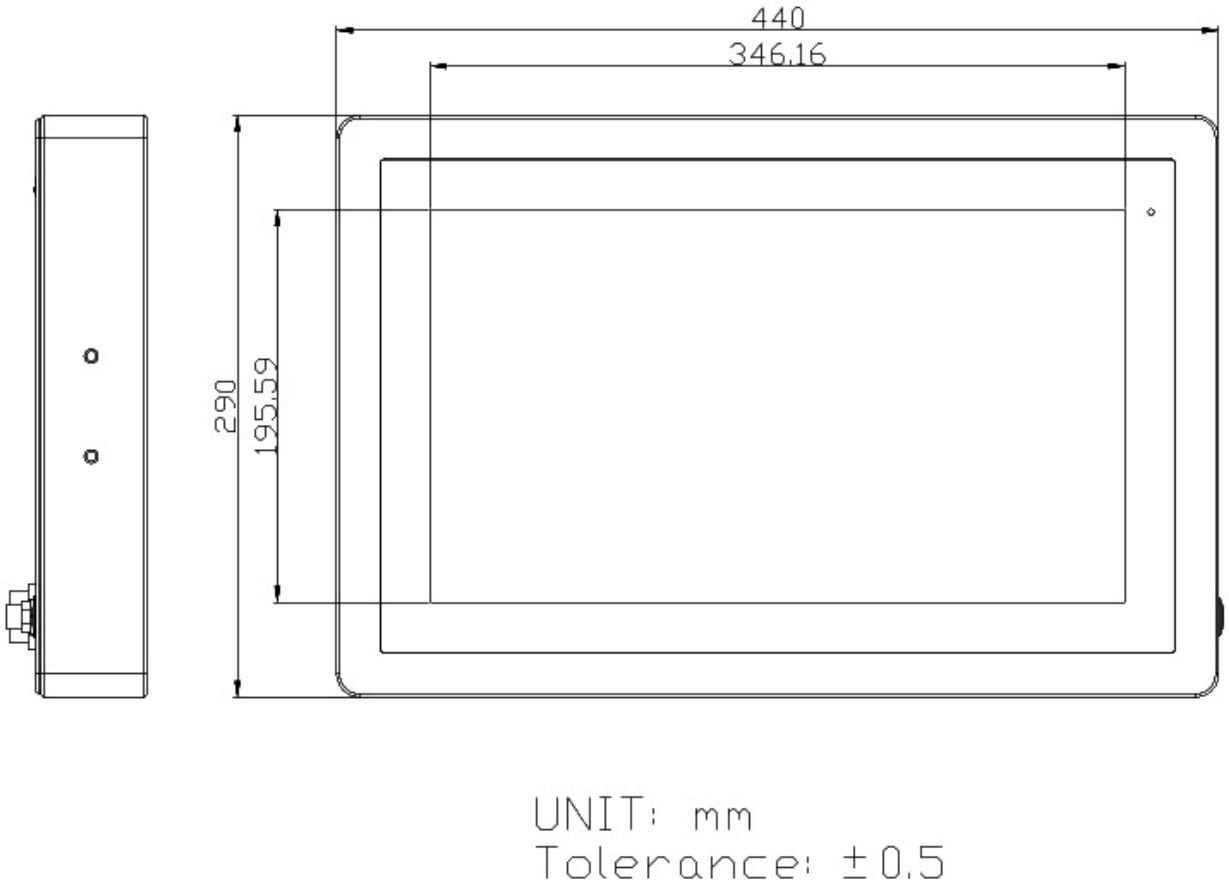

Drawings

Dimensions (mm) 02 and STL file/viewer:

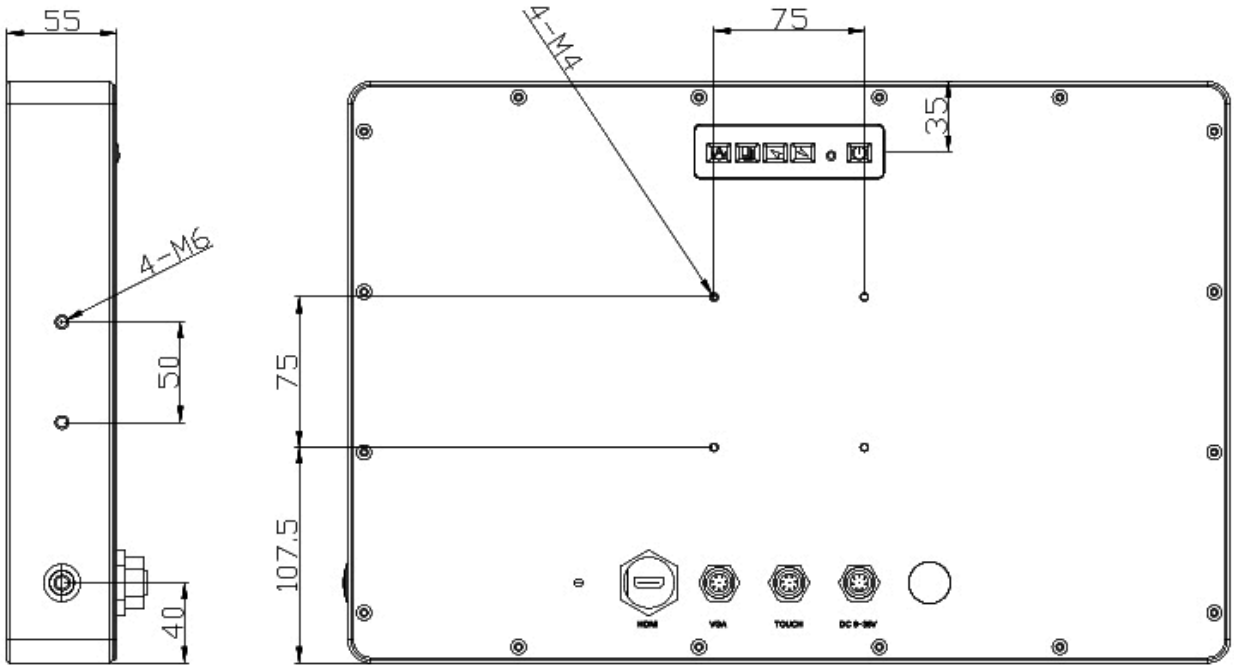

UNIT: mm
Tolerance: ±0.5

Drawings

HDMI cable

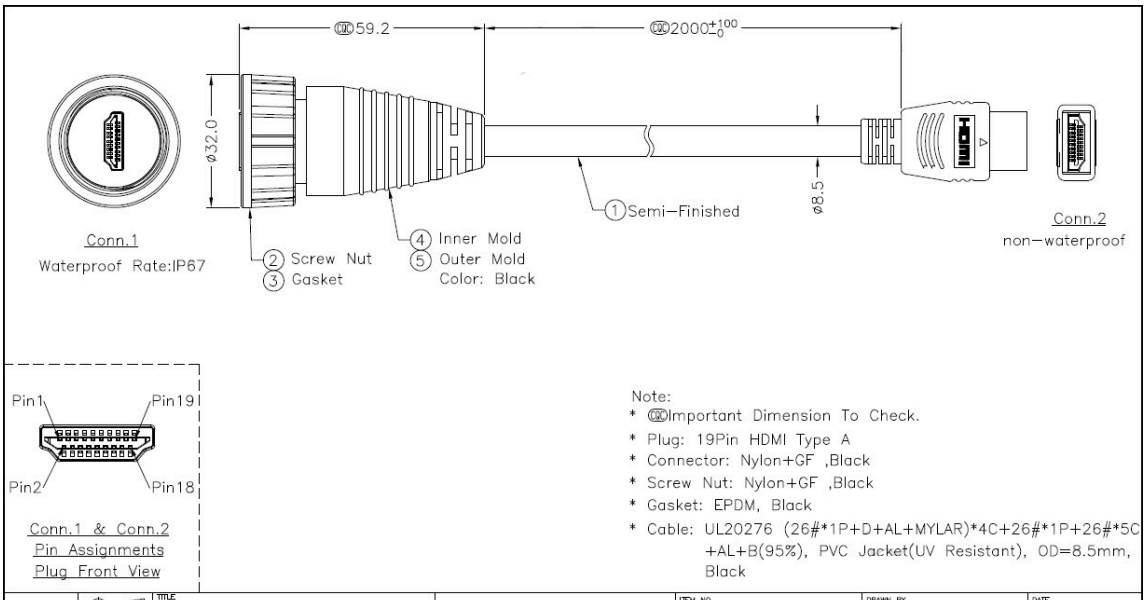

Shell	Braid	Shell			
19	Purple	19	3		
18	Red	18	3		
17	White	17	3		
16	Orange	16	2		
15	Yellow	15			
14	Gray	14	3		
13	Pink	13	3		
12	Brown	12	1		
11	Drain	11			
10	White	10			
9	Blue	9	1		
8	Drain	8			
7	White	7			
6	Green	6	1		
5	Drain	5			
4	White	4			
3	Red	3	1		
2	Drain	2		Type 3	1C
1	White	1		Type 2	1P
Conn.1	Wire Color	Conn.2	Wire Type	Type 1	1P+D+AL
Pin Out				Wire Type	

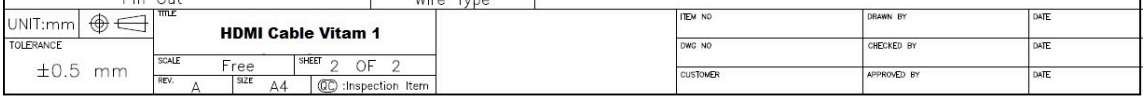

(may not be included in the scope of delivery)

Drawings

USB cable

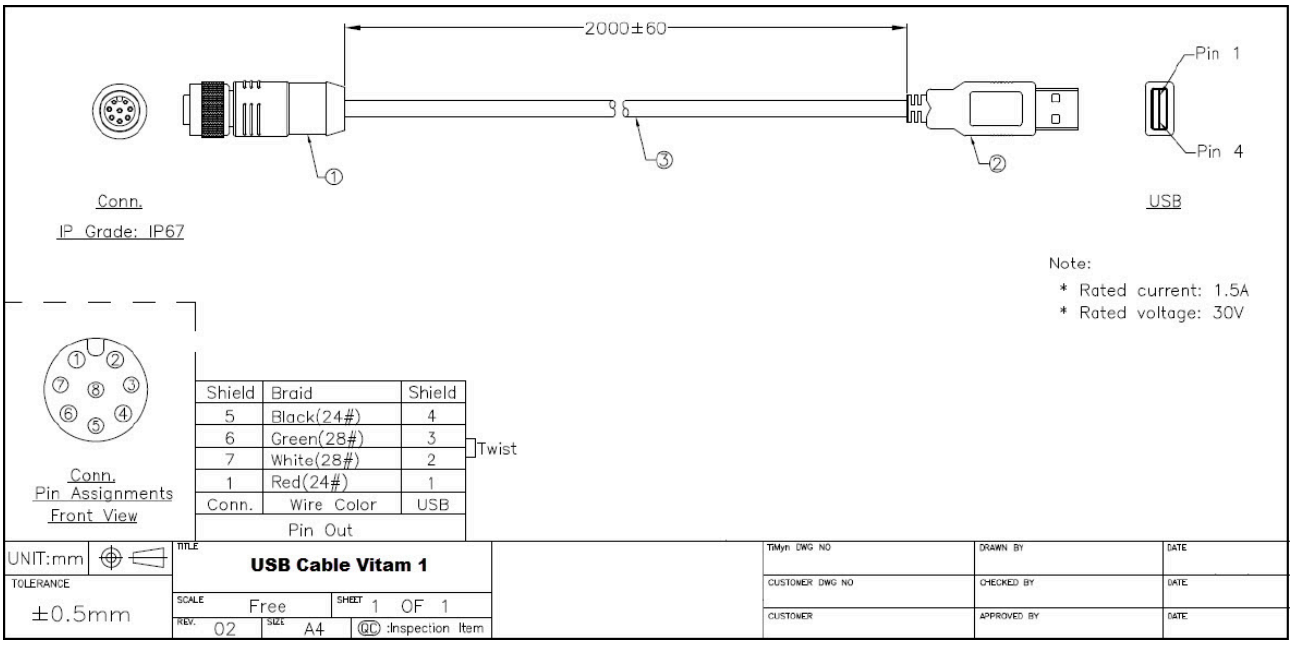

(may not be included in the scope of delivery)

Drawings

VGA cable

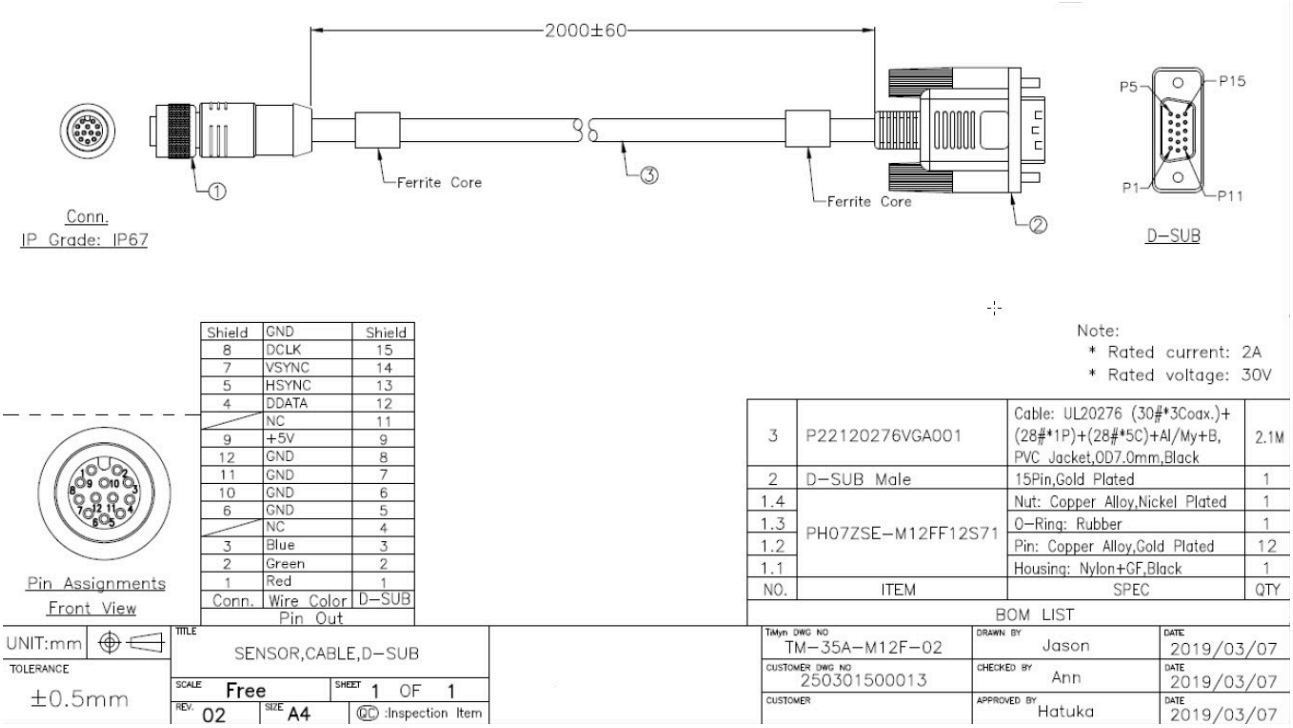

(may not be included in the scope of delivery)

WACHENDORFF
Prozesstechnik GmbH & Co. KG

Wachendorff Prozesstechnik GmbH & Co. KG
Industriestrasse 7 • 65366 Geisenheim
Germany

Phone: +49 (0) 67 22 / 99 65 - 20
E-Mail: wp@wachendorff.de
www.wachendorff-prozesstechnik.de