Stainless steel VESA wall mount for monitors and IPCs with VESA mount

- Adjustable tilt angle
- VESA 75 mm x 75 mm
- VESA 100 mm x 100 mm
- VESA 200 mm x 100 mm
- Up to 13 kg load capacity

https://www.wachendorff-prozesstechnik.de/en/PPC-W-101

Description
The stainless steel VESA wall mount for industrial panel PCs and displays is characterized by an adjustable tilt angle and a load capacity of up to 13 kg. The stainless steel allows it to be used in clean and hygienically demanding environments. The wall mount with Vesa mount 75 mm x 75 mm and 100 mm x 100 mm is available in 2 versions: stainless steel (type 304) or in harder stainless steel (type 316)

Product details	
Assembly:	PPC-W-101 VESA Mount Standard 75 x 75 mm / 100 x 100 mm PPC-W-101S VESA Mount Standard 75 x 75 mm / 100 x 100 mm PPC-W-102 VESA Mount Standard 200 x 100 mm
Load capacity:	13 kg
Dimensions (WxHxD):	PPC-W-101 168.7 mm x 143 mm x 123 mm PPC-W-101S 168.7 mm x 143 mm x 123 mm PPC-W-102 220 mm x 143 mm x 130 mm
Material:	PPC-W-101 304 stainless steel PPC-W-101S 316 stainless steel PPC-W-102 Stainless steel 304
Scope of delivery:	Wall bracket
Customs tariff number:	84733080
Manufacturer:	Aplex Technology Inc.

Products Order no.	
PPC-W-101	VESA wall bracket stainless steel (type 304) 75 x 75 / 100 x 100
PPC-W-101S	VESA wall bracket stainless steel (type 316) 75 x 75 / 100 x 100
PPC-W-102	VESA wall mount stainless steel (type 304) 200 x 100

Drawings

Dimensions 01:

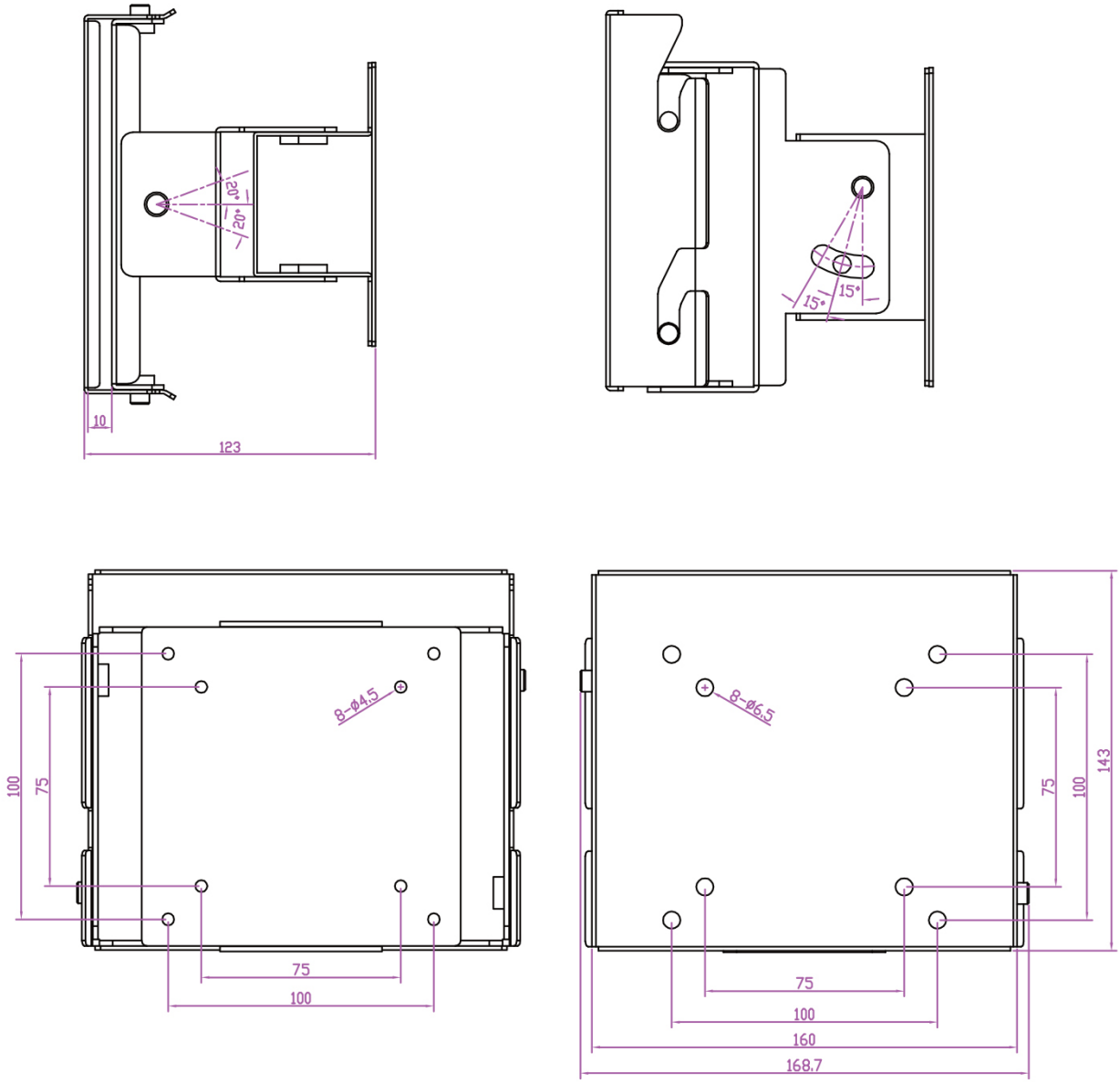

Drawings

Dimensions 02:

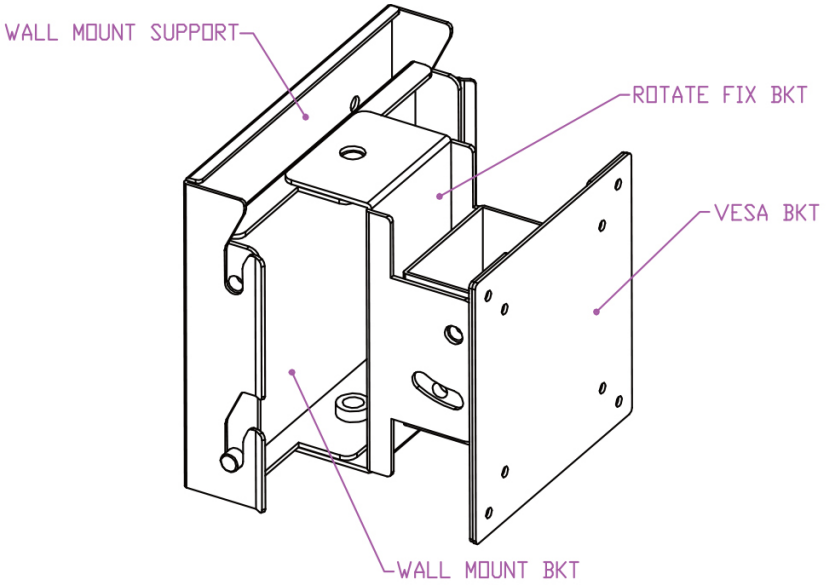

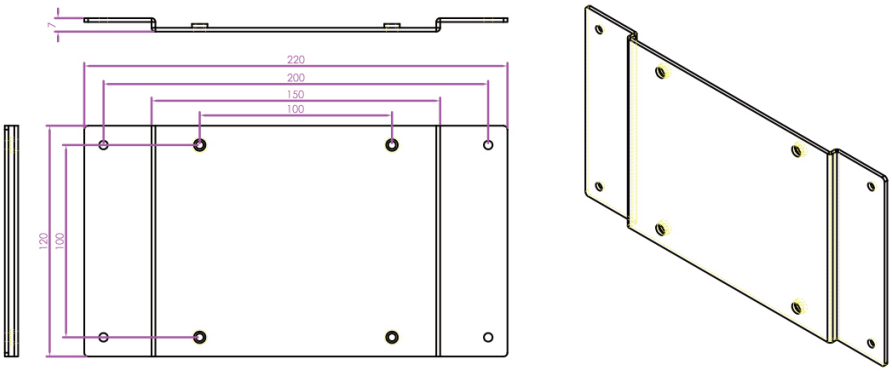

** 24" need add 200x100 transfer plat*

WACHENDORFF
Prozesstechnik GmbH & Co. KG

Wachendorff Prozesstechnik GmbH & Co. KG
Industriestrasse 7 • 65366 Geisenheim
Germany

Phone: +49 (0) 67 22 / 99 65 - 20
E-Mail: wp@wachendorff.de
www.wachendorff-prozesstechnik.de