WACHENDORFF
Prozesstechnik GmbH & Co. KG

Advanced HMI 9.7" TFT Touch cMT3092X

- Plastic housing
- 9.7" WVA LCD graphic display 1024 x 768 pixels
- Fanless cooling system
- Integrated 4 GB flash memory and RTC
- SD slot for SD/SDHC cards
- COM2 / COM3 RS485 2-wire supports MPI 187.5 K
- MQTT
- OPC UA (client/server)
- IP65 on the front, NEMA4 compliant
- EasyAccess 2.0 license optional
- CODESYS V3 PLC optional

https://www.wachendorff-prozesstechnik.de/en/cMT3092X

Description

The Advanced HMI cMT3092X from Weintek with its quad-core processor enables high performance in the visualization of data. It is also possible to monitor and control the cMT3092X via the cMT Viewer APP on a panel PC or a display.
The IIoT standard protocols OPC UA and MQTT enable communication between your machines / systems up to the higher-level control / management systems. This ensures simultaneous monitoring and control of the transmission data. This HMI can optionally be equipped with a soft PLC.

Product details

Display:	Size: 9.7" WVA Resolution: 1024 x 768 pixels Brightness: 350 cd/m² Contrast: 900 : 1 Backlight: LED Backlight life: >30,000 hours Colors: 16.2M LCD viewing angle (up/down/left/right): 89/89/89/89
Touch display:	Type: 4-wire analog resistive. Accuracy: Active range length (X) ±2 %, width (Y) ±2 %
Memory:	Flash: 4 GB RAM: 1 GB
Processor:	32-bit RISC Cortex-A17 1.6 GHz quad-core
Interfaces:	USB Host: 1x USB 2.0 Ethernet: LAN1: 10/100/1000 Base-T x2 LAN2: 10/100 Base-T x2 COM Port: Con A: COM2 RS485 2-/4-wire, COM3 RS485, CAN bus Con B: COM1/COM3 RS232 (only use Tx & RX (not RTS/CTS) for COM1 RS232 if COM3 RS232 is used at the same time) RS485 isolation: No HDMI: No Audio Output: Built-in mono speaker Video Input: No
Real-time clock:	Integrated real-time clock RTC
Power supply:	Input voltage: 24 VDC ±20 % Galvanic isolation (input voltage from system voltage): integrated Current consumption: 1 A at 24 VDC Dielectric strength: 500 VAC (1 min.) Insulation resistance: >50 MOhm at 500 VDC Shock resistance: 10 Hz to 25 Hz (X,Y, Z direction 2 G 30 minutes)
Printed circuit board coating:	Yes, PCB
Housing:	Plastic housing
Dimensions (WxHxD):	260.6 mm x 203.1 mm x 44.5 mm Panel cut-out: 250 mm x 192 mm
Weight:	approx. 1.0 kg
Fastening:	Panel mounting, VESA 75 mm x 75 mm
Protection class:	UL Type 4X (for indoor use only) / NEMA4 / front IP65
Ambient temperature:	Operation: 0 °C to +50 °C. Storage: -20 °C to +60 °C. Relative humidity: 10 % to 90 % (non-condensing)
Certificates:	CE cULus
Software:	EasyBuilder Pro from V6.4 EasyAccess 2.0 license optional
Customs tariff number:	85371098
Manufacturer:	Weintek Labs, Inc

Products Order no.

cMT3092X	Advanced HMI, 9.7", 1024 x 768, CAN, OPC UA
cMT3092X-CD	Advanced HMI, 9.7", 1024 x 768, CAN, OPC UA incl. Codesys

Accessories Order no.

DRS4-24A	Power supply unit for DIN rail, 85 to 264 VAC, 24 VDC 4.2 A, screw terminal
KABETH12	Patch cable, RJ45 UTP CCA, CAT5e white, 2 m
KABUSB11	USB programming cable, 1.5 m

Drawings

Dimensions

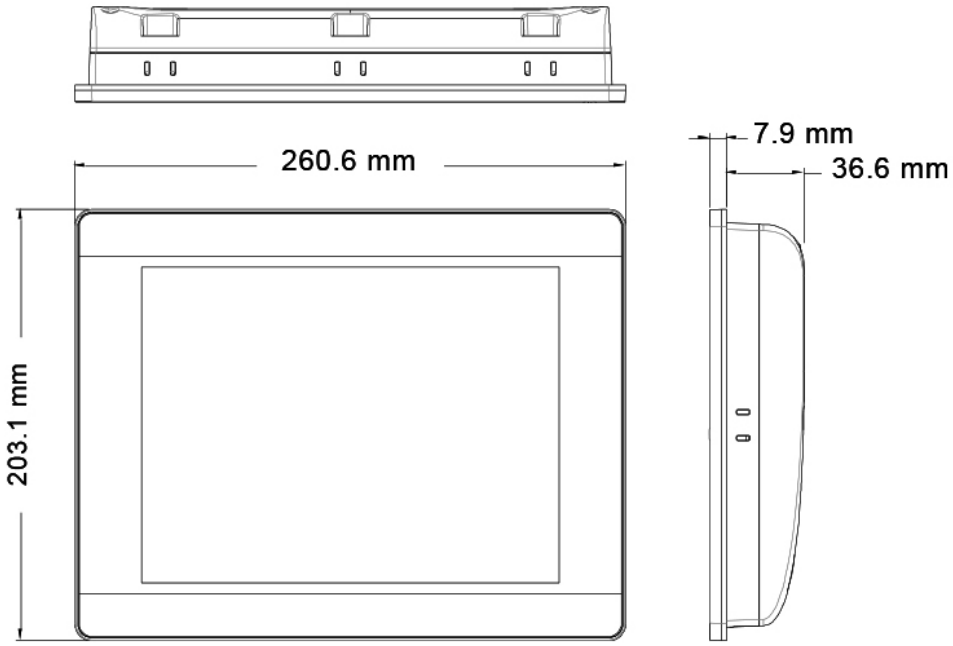

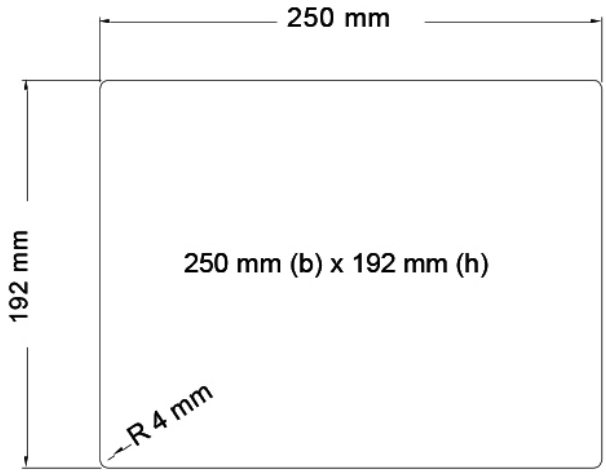

Ausschnitt

Drawings

Connections

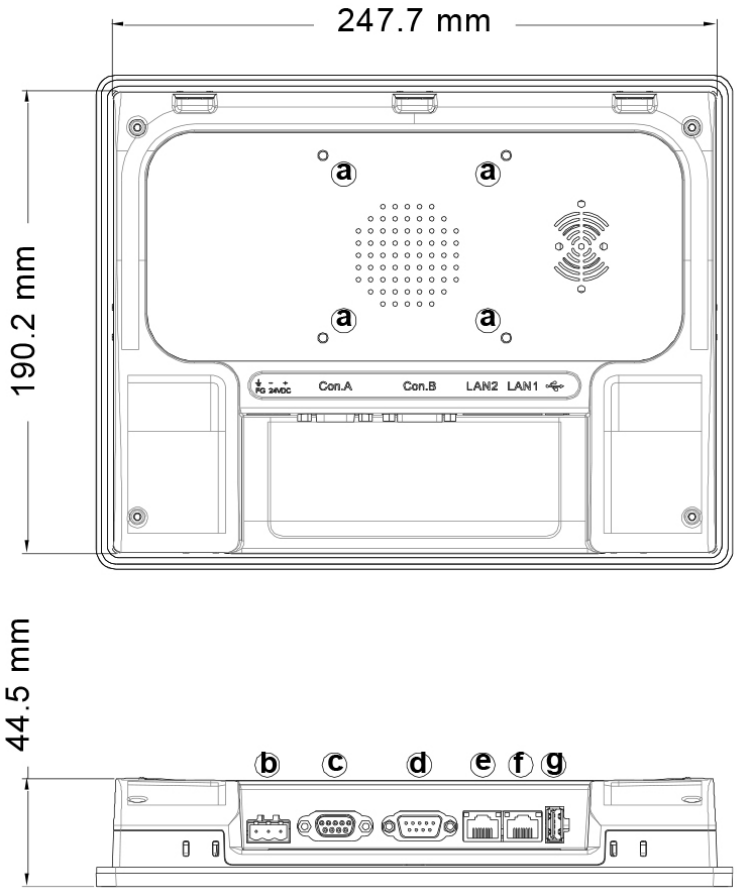

a	VESA 75 mm Screw Holes	e	LAN 2
b	Power Connector	f	LAN 1
c	COM2 RS-485, COM3 RS-485, CAN Bus (Con.A)	g	USB Host
d	COM1 RS-232, COM3 RS-232 (Con.B)		

Drawings

PIN

Pin Assignment:

Con.B: COM1 / COM3 [RS232], 9 Pin, Male, D-sub

PIN#	COM1 [RS232]4W	COM3 [RS232]2W
1		
2	RxD	
3	TxD	
4		
5	GND	
6		
7	RTS	TxD
8	CTS	RxD
9		

Con.A: COM2 / COM3 [RS485]/ CAN Bus, 9 Pin, Female, D-sub

PIN#	COM2 [RS485]2W	COM2 [RS485]4W	COM3 [RS485]2W	CAN Bus
1	Data-	Rx-		
2	Data+	Rx+		
3		Tx-		
4		Tx+		
5	GND			
6			Data-	
7				CAN_L
8				CAN_H
9			Data+	

Drawings

Step file

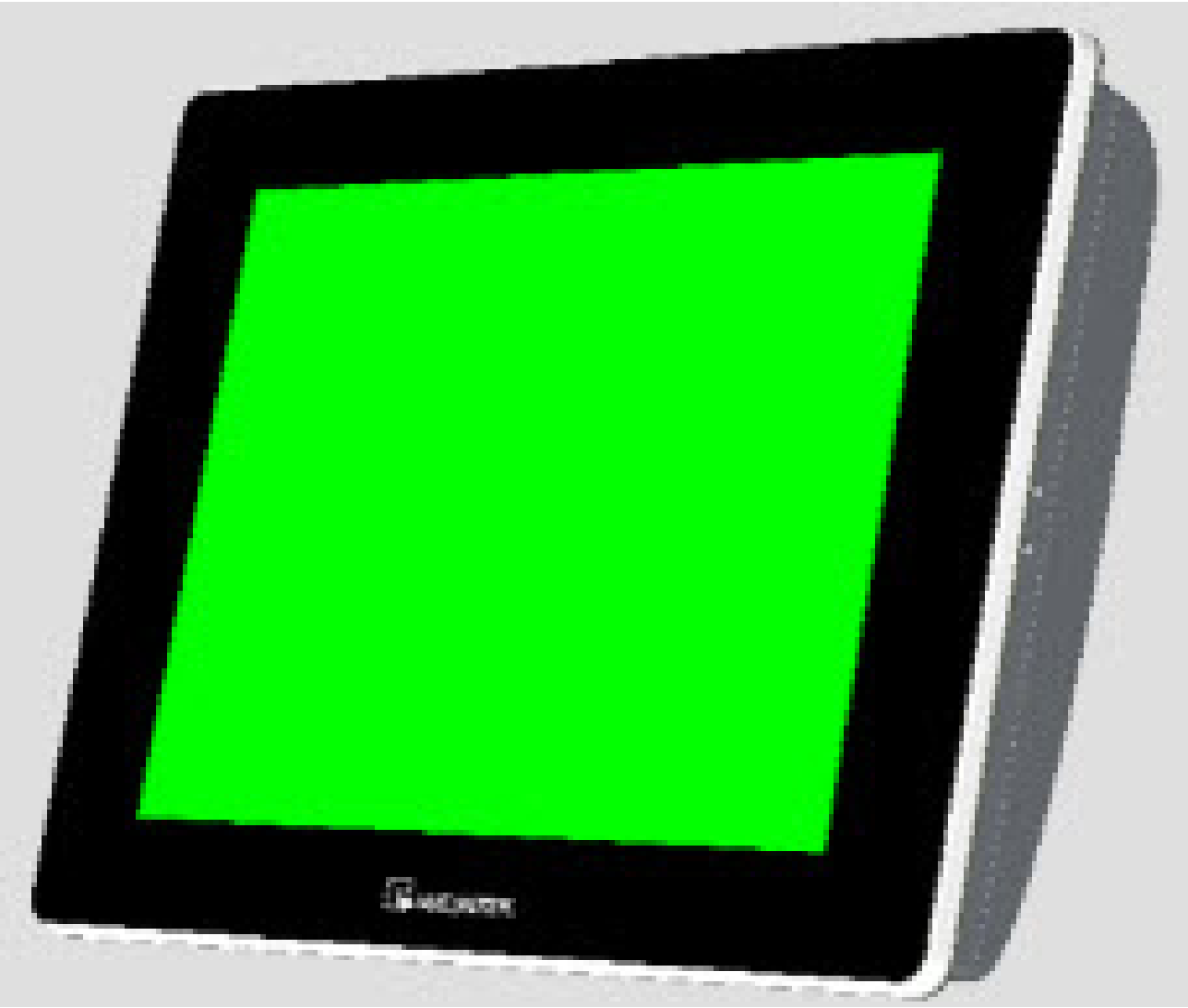

Step file as .rar
cMT3092X.rar

WACHENDORFF
Prozesstechnik GmbH & Co. KG

Wachendorff Prozesstechnik GmbH & Co. KG
Industriestrasse 7 • 65366 Geisenheim
Germany

Phone: +49 (0) 67 22 / 99 65 - 20
E-Mail: wp@wachendorff.de
www.wachendorff-prozesstechnik.de