WACHENDORFF
Prozesstechnik GmbH & Co. KG

19 inch Panel PC ViTAM-919AP
Stainless steel housing

- 19" TFT-LCD, 1280 x 1024 pixels
- Projected capacitive touch
- Processor: Intel® Core™ i3-6100U (2.3 GHz) / i5-6300U (3.0 GHz)
- IP66/IP69K stainless steel housing with M12 connections
- Flush frame design
- Fanless cooling system
- Reading angle horizontal 170°, vertical 170°

https://www.wachendorff-prozesstechnik.de/en/ViTAM-919AP

Description

The ViTAM-9A series is based on a 6th generation Intel® Core™-i processor.
This very powerful and efficient processor family provides sufficient computing power for medium and large applications. The RAM can be expanded to up to 16 GB, enabling more extensive projects such as SCADA or IIoT monitor control applications. The industrial panel PCs in this series are available in display sizes ranging from 15" to 23.8", with a choice of projected capacitive, resistive or no touch. The projected capacitive touch enables multi-touch operation with a corresponding operating system. If pressure-sensitive operation is required (e.g. with gloves), the resistive touch is the right choice. The front panels are absolutely flush with the stainless steel housing (type 304). The housing is designed in IP69K (incl. IP66) with M12 connection options. An on/off button is also integrated on the side of the Panel PC. The unique fanless thermal design of the robust stainless steel housing enables effective temperature control. The ViTAM IPC can be optionally equipped with a high-brightness LCD and/or optical bonding for an outstanding display, even under the most difficult conditions. In addition, expansion cards for further interfaces or RFID can be integrated.

Product details

Power supply:	9 VDC to 36 VDC
Power consumption:	max. 49 W
Display:	19" TFT LCD
Resolution:	1280 x 1024 pixels
Aspect ratio:	5:4
Brightness:	350 cd/m² 1000 cd/m² (optional high-brightness LCD)
Backlight:	50,000 h runtime 30,000 h runtime (optional High-Brightness-LCD
Colors:	16.7 million
Contrast:	1000:1
Reading angle:	H: 170° / V: 165° H: 170° / V: 160° (optional high-brightness LCD)
Touch screen:	Projected capacitive touch
Processor:	Intel® Core™ i3-6100U (2.3 GHz) Intel® Core™ i5-6300U (3.0 GHz)
RAM:	up to 16 GB DDR4 2133 MHz SO-DIMM 2Rx8
SSD/HDD:	1x 2.5" SATA3 HDD/SSD (standard 32 GB SSD)
Interfaces:	USB: 1 x M12 8-pin (2 x USB 2.0 via cable) with waterproof termination Serial: 1 x M12 8-pin for COM 1 (RS-232/-422/485, default RS-232) with waterproof termination Ethernet: 1 x M12 A-code, 8-pin, socket (female) for Gigabit Ethernet with waterproof termination Other: 1 x touch on/off button (on the side, waterproof) Power supply: 1 x M12 3-pin, 1 x On/Off button (rear)
Expansion slots:	1 x Mini PCIe for Wifi/BT, 4G/LTE (optional) 1 x RFID (front side, see options)
Housing:	Stainless steel (type 304, optionally 316)
Assembly:	VESA 100 x 100; yoke mount (swivel fork mount)
Protection class:	IP66/IP69K
Weight:	approx. 9.5 kg
Dimensions (WxHxD):	470 mm x 388 mm x 60 mm
Ambient conditions:	Operation: 0 °C to +50 °C ; Storage: -30 °C to +70 °C 10% to 90 %.rH, non-condensing.
Certifications:	CE/FCC Class A
Operating systems:	Windows® 10 IoT Linux
Options:	HDMI VGA (M12, 12-pin) Wifi/BT (via Mini PCIe) 4G/LTE (via Mini PCIe) RFID module (for front-side use, Mifare 13.56 MHz) 2 x USB 2.0 module via TB-528U2 1 x USB 3.0 via cable 1 x LAN Gigabit Ethernet via cable 1 x COM port via TB-528C1 1 x CAN via TB-528CAN2 IP65 water-resistant power supply unit (24 VDC / 90-305 VAC) Optical bonding High Brightness LCD (1000 cd/m2) Stainless steel (type 316) Linux, Android, Windows

Scope of delivery:	Device 1 x M12 power supply unit 1 x M12 USB cable (1x M12 to 2x USB 2.0)
Customs tariff number:	84715000
Manufacturer:	Aplex Technology Inc.

Drawings

Dimensions (mm):

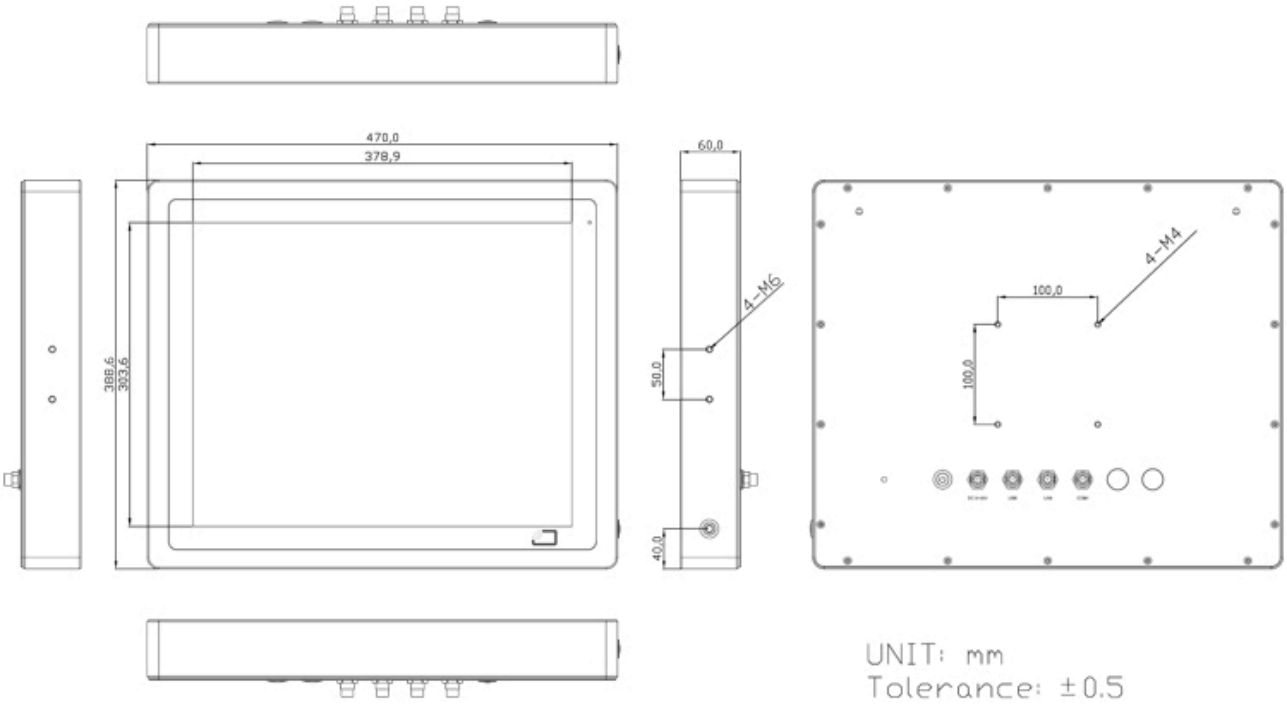

Drawings

LAN cable

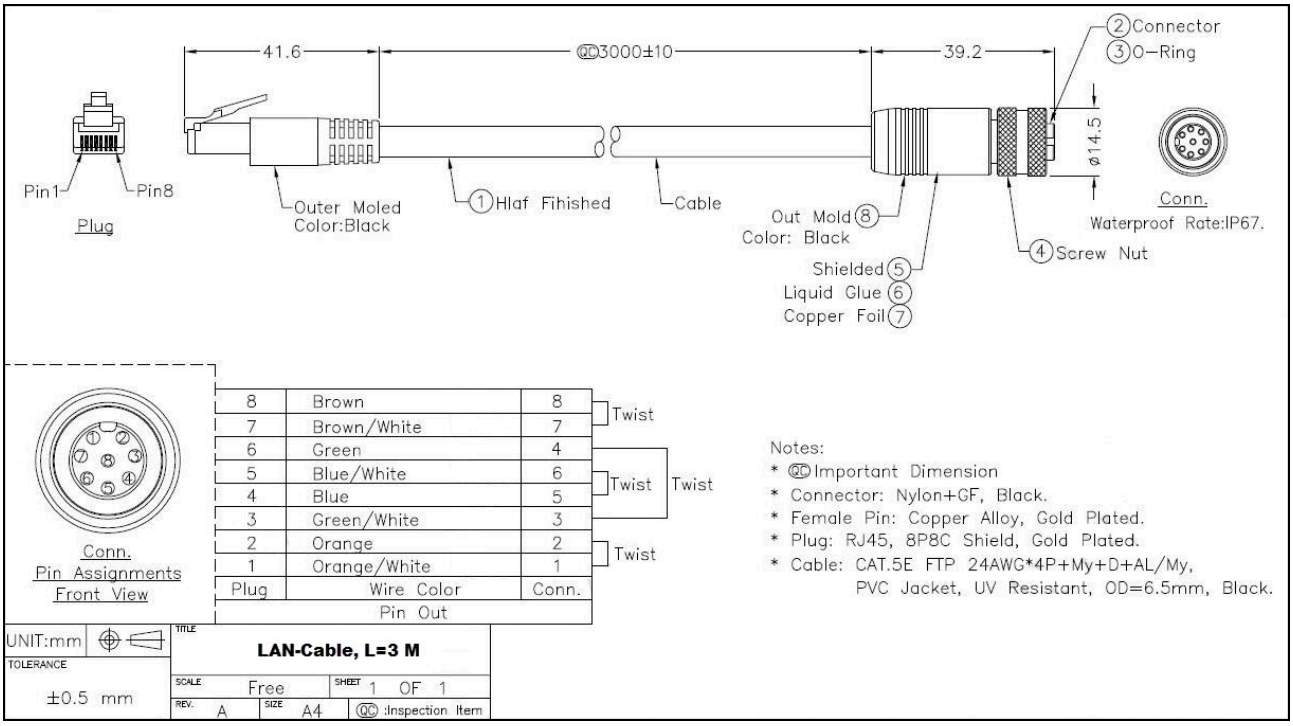

(may not be included in the scope of delivery)

Drawings

USB 3.0 cable

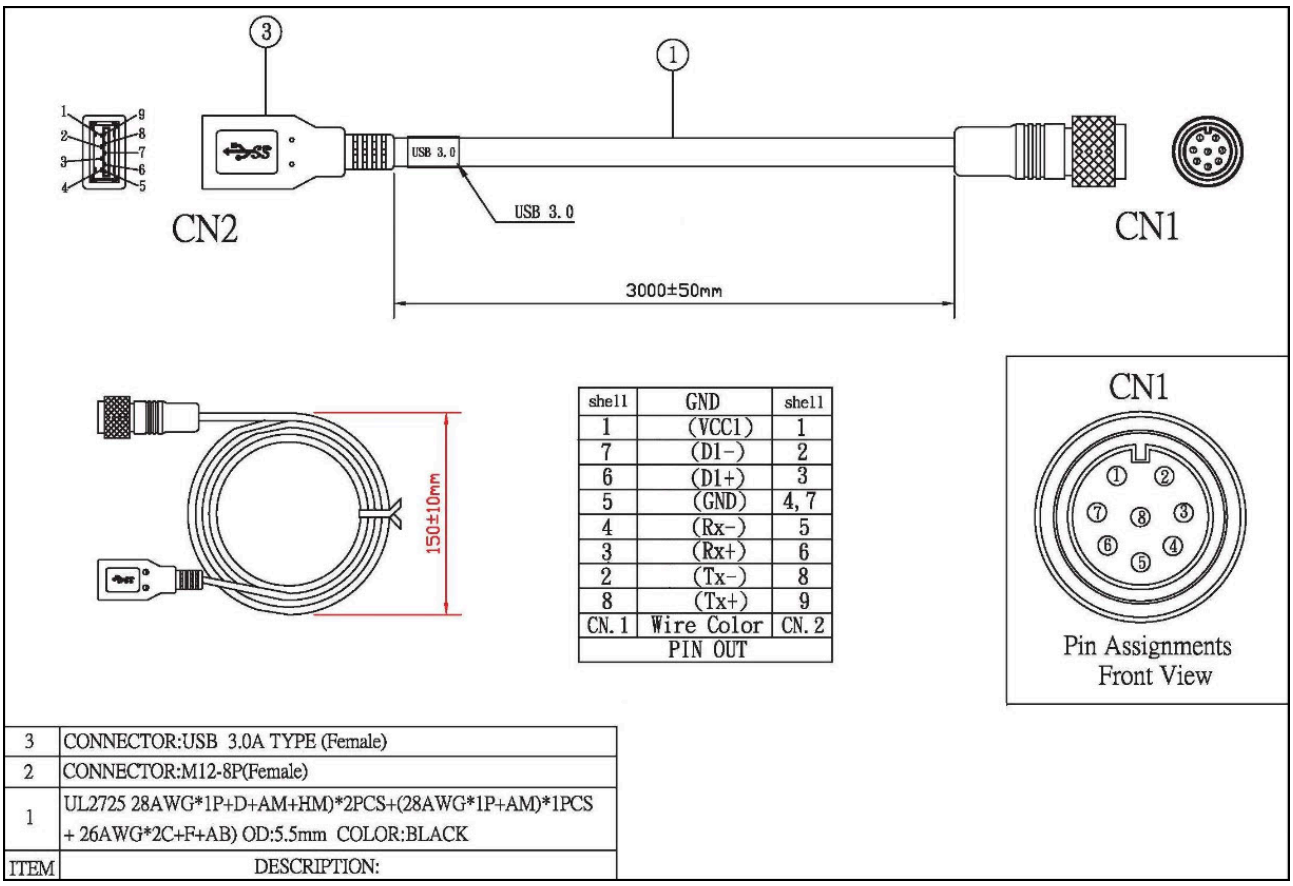

shell	GND	shell
1	(VCC1)	1
7	(D1-)	2
6	(D1+)	3
5	(GND)	4, 7
4	(Rx-)	5
3	(Rx+)	6
2	(Tx-)	8
8	(Tx+)	9
CN. 1	Wire Color	CN. 2
PIN OUT		

3	CONNECTOR:USB 3.0A TYPE (Female)
2	CONNECTOR:M12-8P(Female)
1	UL2725 28AWG*1P+D+AM+HM)*2PCS+(28AWG*1P+AM)*1PCS + 26AWG*2C+F+AB) OD:5.5mm COLOR:BLACK
ITEM	DESCRIPTION:

(may not be included in the scope of delivery)

Drawings

USB Y-cable

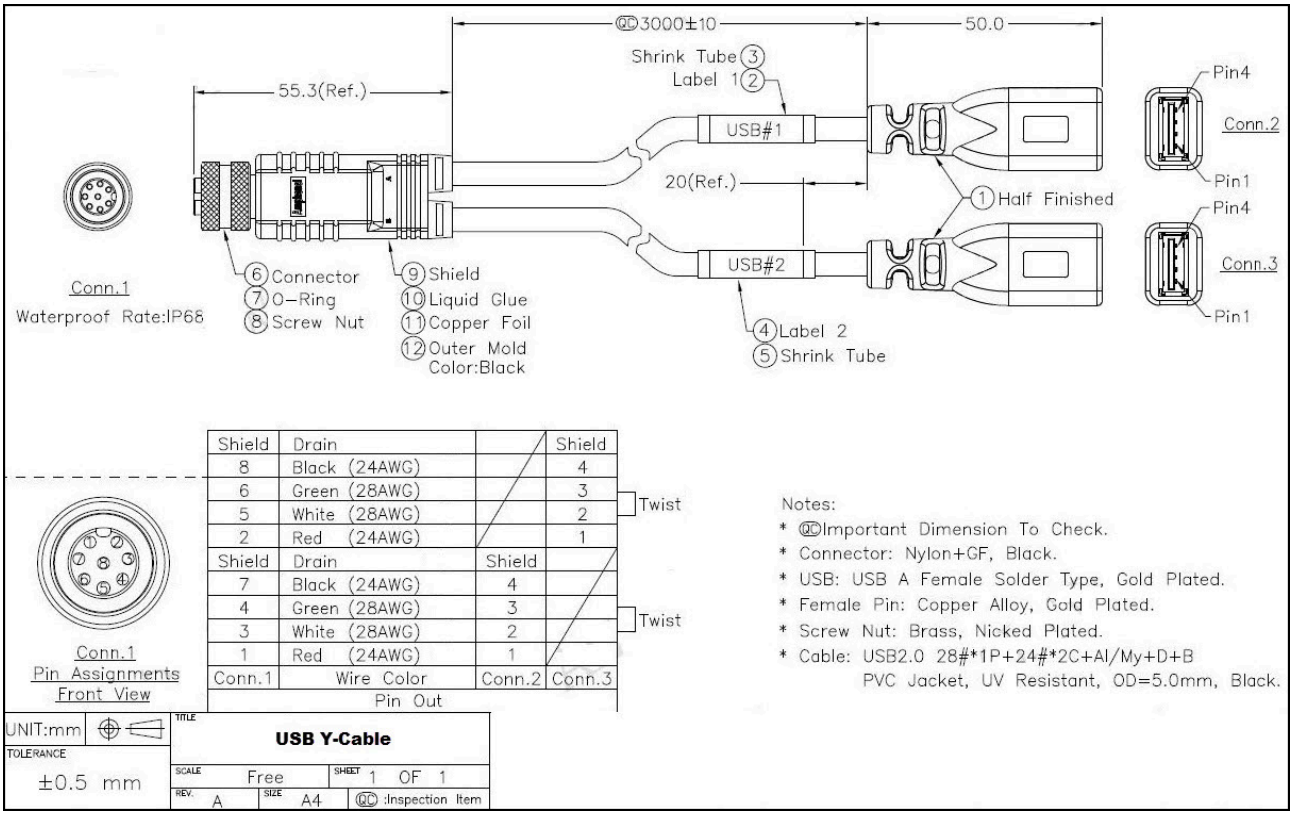

Shield	Drain		Shield
8	Black (24AWG)		4
6	Green (28AWG)		3
5	White (28AWG)		2
2	Red (24AWG)		1
Shield	Drain	Shield	
7	Black (24AWG)	4	
4	Green (28AWG)	3	
3	White (28AWG)	2	
1	Red (24AWG)	1	
Conn.1	Wire Color	Conn.2	Conn.3
	Pin Out		

(may not be included in the scope of delivery)

Drawings

COM cable

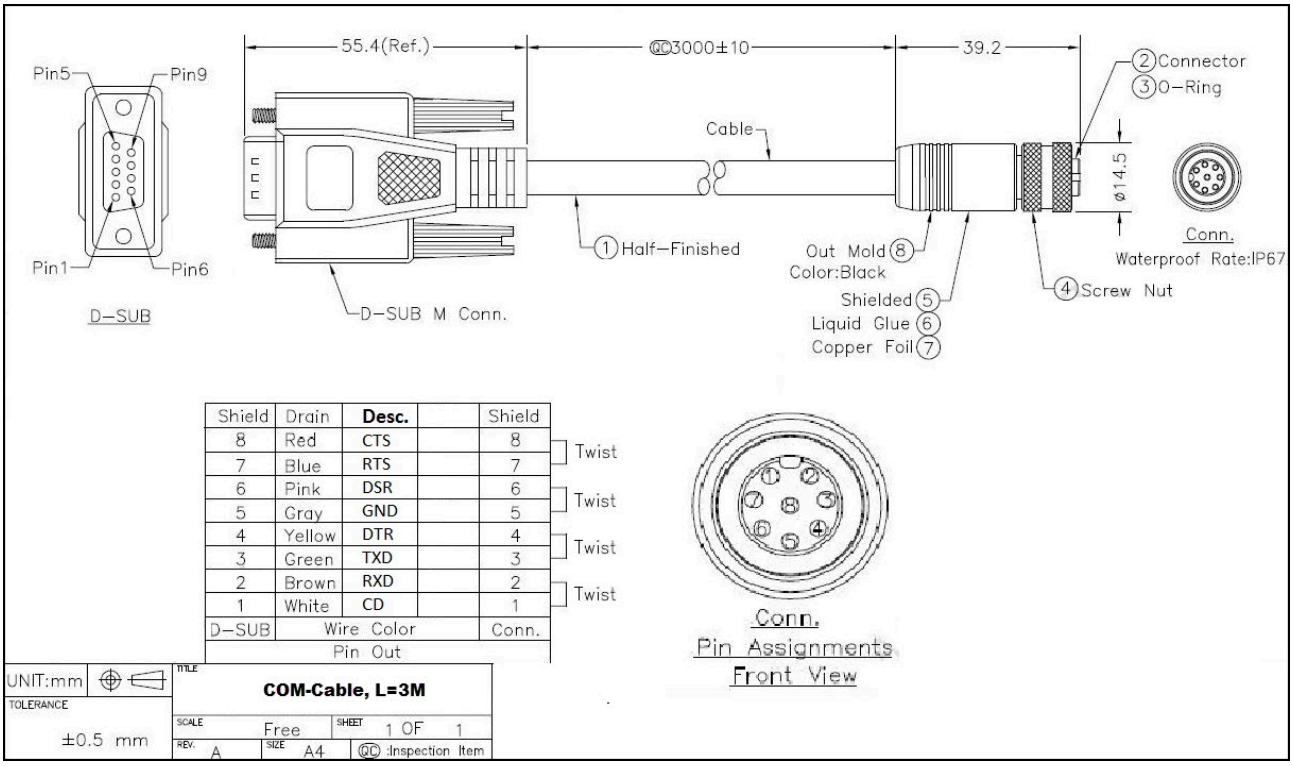

Shield	Drain	Desc.		Shield
8	Red	CTS		8
7	Blue	RTS		7
6	Pink	DSR		6
5	Gray	GND		5
4	Yellow	DTR		4
3	Green	TXD		3
2	Brown	RXD		2
1	White	CD		1
D-SUB	Wire Color			Conn.
Pin Out				

(may not be included in the scope of delivery)

Drawings

Power adapter

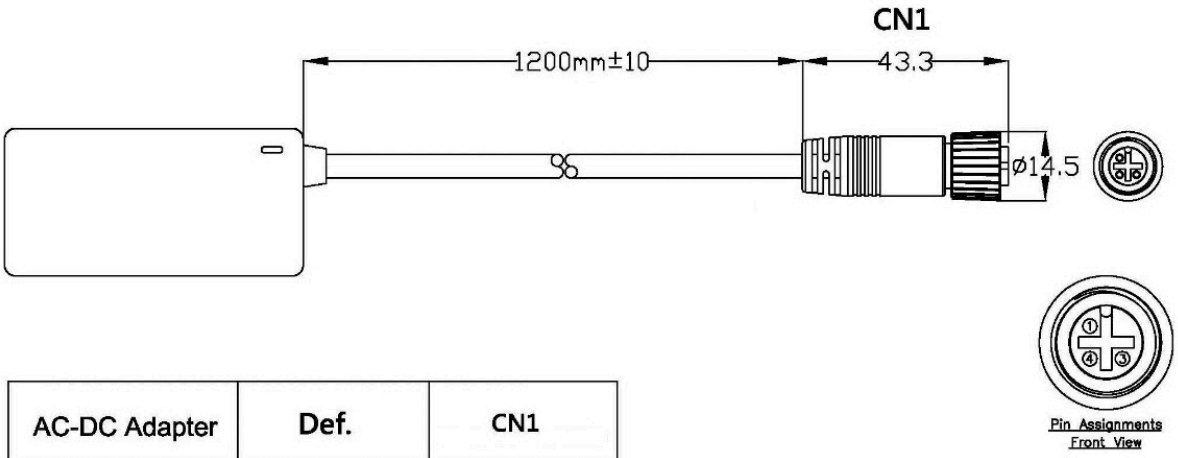

AC-DC Adapter	Def.	CN1
	FG	1
(White)	VCC	3
	GND	4

(may not be included in the scope of delivery)

WACHENDORFF
Prozesstechnik GmbH & Co. KG

Wachendorff Prozesstechnik GmbH & Co. KG
Industriestrasse 7 • 65366 Geisenheim
Germany

Phone: +49 (0) 67 22 / 99 65 - 20
E-Mail: wp@wachendorff.de
www.wachendorff-prozesstechnik.de