WACHENDORFF
Prozesstechnik GmbH & Co. KG

12.1 inch Panel PC ViTAM-612G
Stainless steel housing

- 12.1" TFT LCD, 800 x 600 pixels
- Without touch function
- Processor: Freescale i.MX6 Dual Lite 1.0 GHz
- IP66/IP69K stainless steel housing with M12 connections
- Flush frame design
- Fanless cooling system
- Reading angle horizontal 160°, vertical 140

https://www.wachendorff-prozesstechnik.de/en/ViTAM-612G

Description

The ViTAM-6 series is based on a Freescale i.MX6 Dual Lite 1.0 GHz processor.
The industrial panel PCs in this series are available in display sizes ranging from 10.1" to 15", with a choice of projected capacitive, resistive or no touchscreen. The projected capacitive touch enables multi-touch operation with a corresponding operating system. If pressure-sensitive operation is required (e.g. with gloves), the resistive touch is the right choice. The front panels are absolutely flush with the stainless steel housing (type 304). The housing is IP69K (incl. IP66) with M12 connection options. The unique fanless thermal design of the robust stainless steel housing enables effective temperature control. The ViTAM IPC can be optionally equipped with a high-brightness LCD and/or optical bonding for an outstanding display, even under the most difficult conditions. In addition, expansion cards can be integrated for additional interfaces, RFID or even the supply of the panel PC via Power over Ethernet (POE).

Product details

Power supply:	9 VDC to 36 VDC Power consumption: max. 12.4 W
Power consumption:	max. 12 W
Display:	12.1" TFT LCD
Resolution:	800 x 600 pixels (optional 1,024 x 768 pixels)
Aspect ratio:	4:3
Brightness:	450 cd/m² (500 cd/m2 at 1,024 x 786 pixels / optional High Brightness LCD 1,000 cd/m²)
Backlight:	50,000 h running time
Colors:	262 k (16.2 million at 1,024 x 768 pixels)
Contrast:	800:1 (700:1 at 1,024 x 768 pixels)
Reading angle:	H: 160° / V: 150° (160° / 140° at 1024 x 768 pixels)
Touch screen:	without touch function
Processor:	Freescale i.MX6 Dual Lite 1.0 GHz
System Chipset:	SoC
RAM:	1 GB DDR3 RAM, onboard NAND Flash
SSD/HDD:	4 GB eMMC NAND Flash, onboard
Interfaces:	USB: 1 x M12 8-pin (2 x USB 2.0 via cable) with waterproof termination Serial: 1 x M12 8-pin for COM 1 (RS-232/-422/485, default RS-232) with waterproof termination Ethernet: 1 x M12 A-code, 8-pin, socket (female) for Gigabit Ethernet with waterproof termination Power supply: 1 x M12 3-pin, 1 x On/Off switch (rear) Possible extension: 1 x M12 Available extensions: 1 x CAN via TB-528CAN2 1 x PoE module (IEEE 802.3af/at) via AG5300
Expansion slots:	1 x Mini PCIe for Wifi/BT (optional) 1 x RFID (front side, see options)
Housing:	Stainless steel (type 304, optionally 316)
Assembly:	VESA 75 x 75; yoke mount (swivel fork mount)
Protection class:	IP66/IP69K
Weight:	approx. 4.6 kg
Dimensions (WxHxD):	335 mm x 265 mm x 53 mm
Ambient conditions:	Operation: 0 °C to +50 °C ; Storage: -30 °C to +70 °C 10% to 90 %.rH, non-condensing.
Certifications:	CE/FCC class A
Operating systems:	Android Linux
Options:	Wifi/BT (via Mini PCIe) RFID module (for front-side use, Mifare 13.56 MHz) 1 x CAN via TB-528CAN2 1 x PoE module (IEEE 802.3af/at) via AG5300 IP65 Waterproof Power Adapter Optical bonding High Brightness LCD (1000 cd/m2) Stainless steel (type 316) Linux, Android, Windows
Scope of delivery:	Device 1 x M12 plug-in power supply 1 x M12 USB cable (1x M12 to 2x USB 2.0)

Customs tariff number:	84715000
Manufacturer:	Aplex Technology Inc.

Drawings

Dimensions (mm):

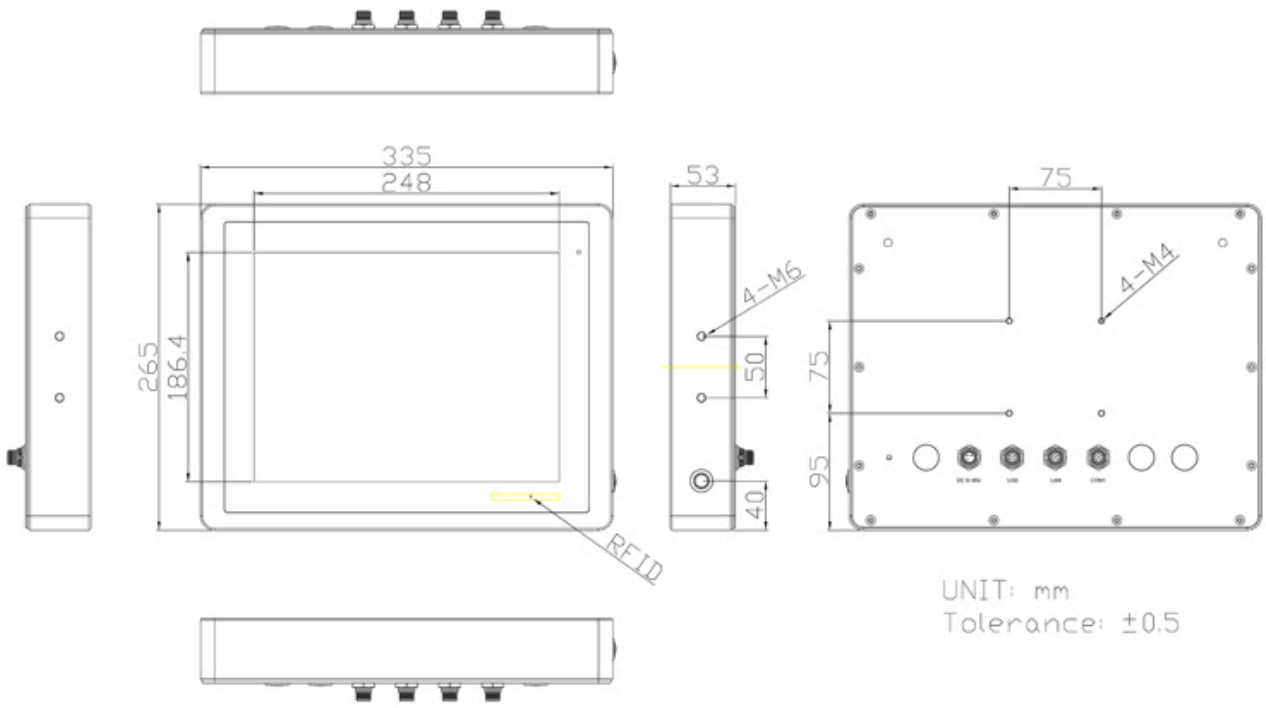

Drawings

LAN cable

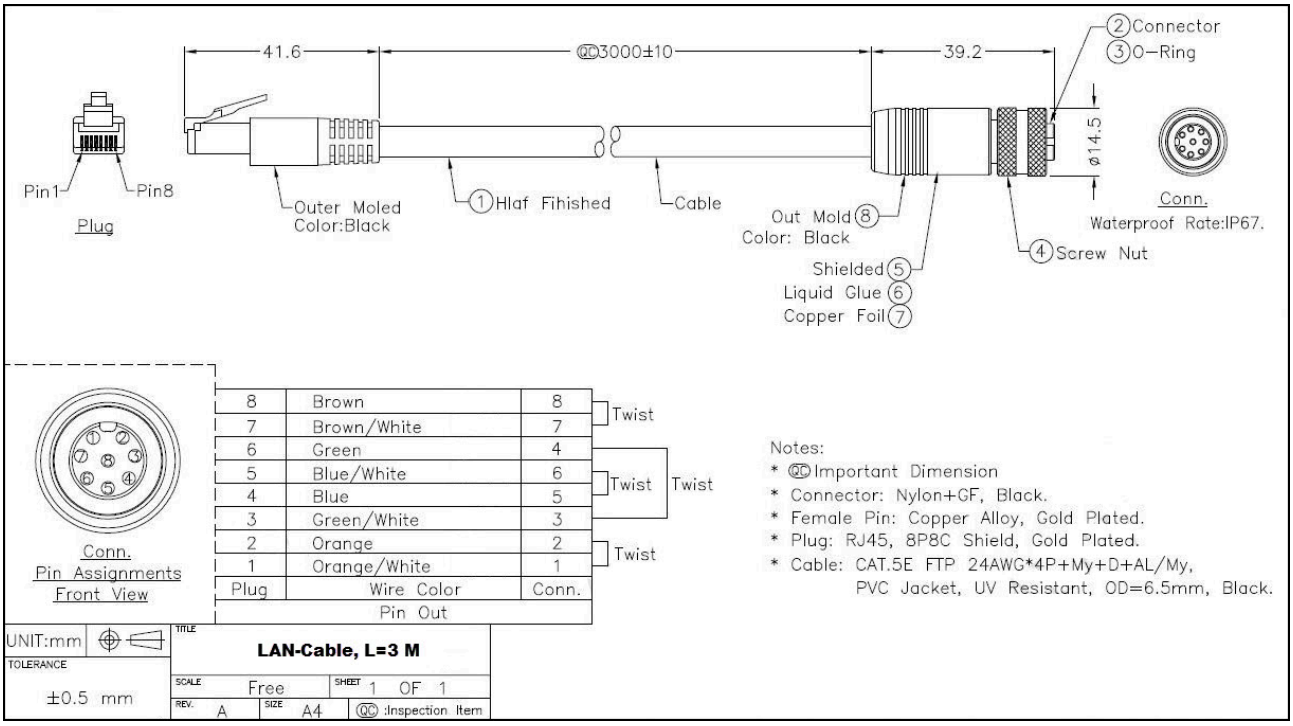

(may not be included in the scope of delivery)

Drawings

USB 3.0 cable

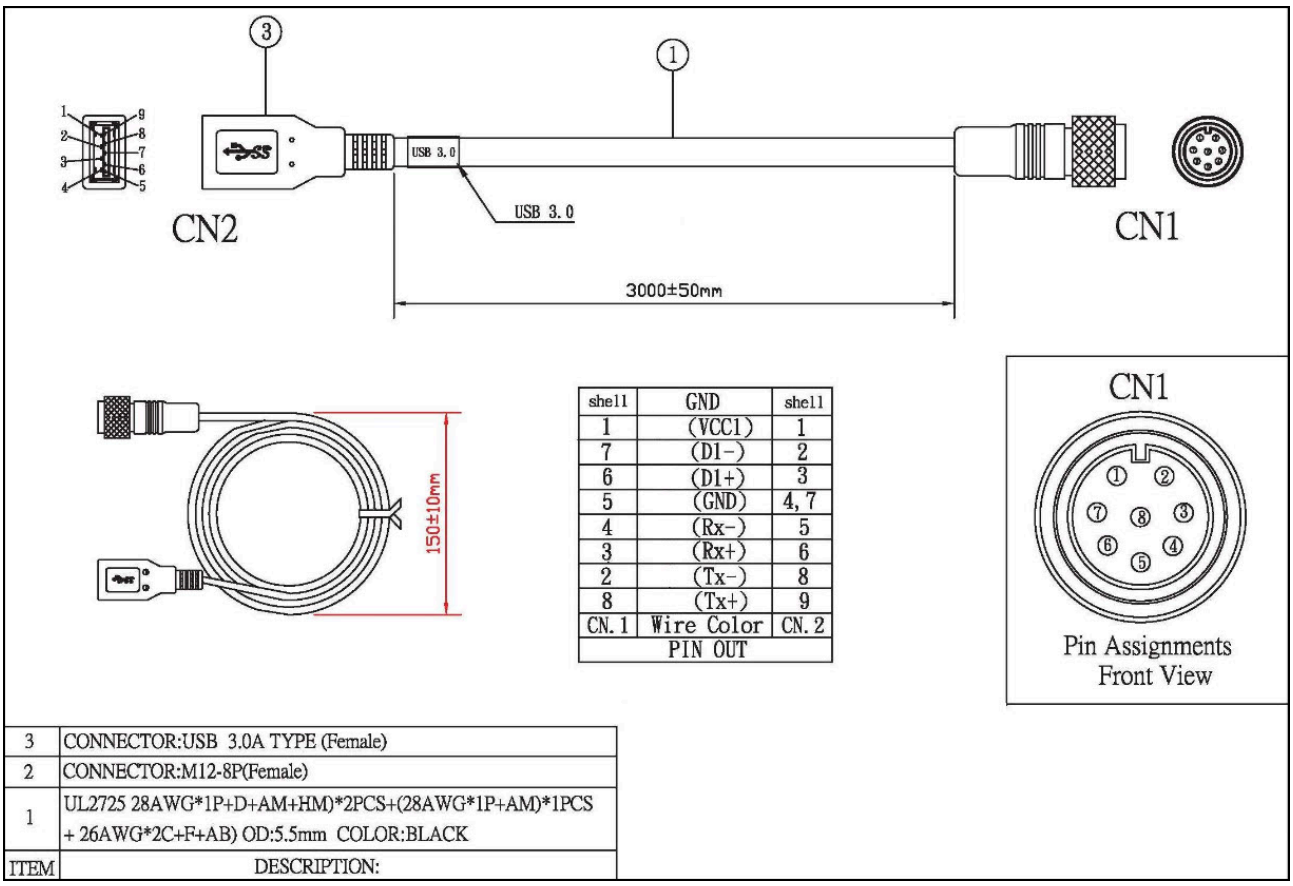

shell	GND	shell
1	(VCC1)	1
7	(D1-)	2
6	(D1+)	3
5	(GND)	4, 7
4	(Rx-)	5
3	(Rx+)	6
2	(Tx-)	8
8	(Tx+)	9
CN. 1	Wire Color	CN. 2
PIN OUT		

ITEM	DESCRIPTION:
3	CONNECTOR:USB 3.0A TYPE (Female)
2	CONNECTOR:M12-8P(Female)
1	UL2725 28AWG*1P+D+AM+HM)*2PCS+(28AWG*1P+AM)*1PCS + 26AWG*2C+F+AB) OD:5.5mm COLOR:BLACK

(may not be included in the scope of delivery)

Drawings

USB Y-cable

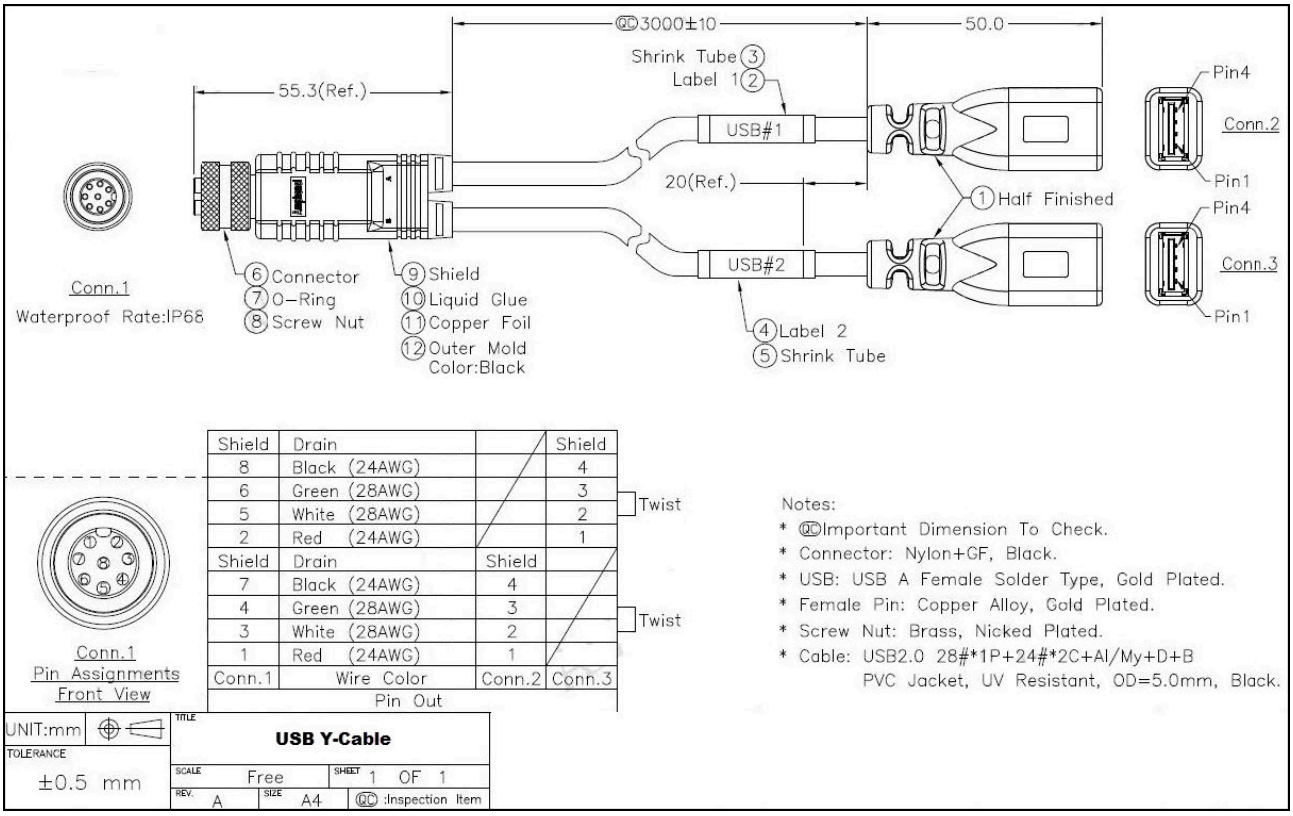

(may not be included in the scope of delivery)

Drawings

COM cable

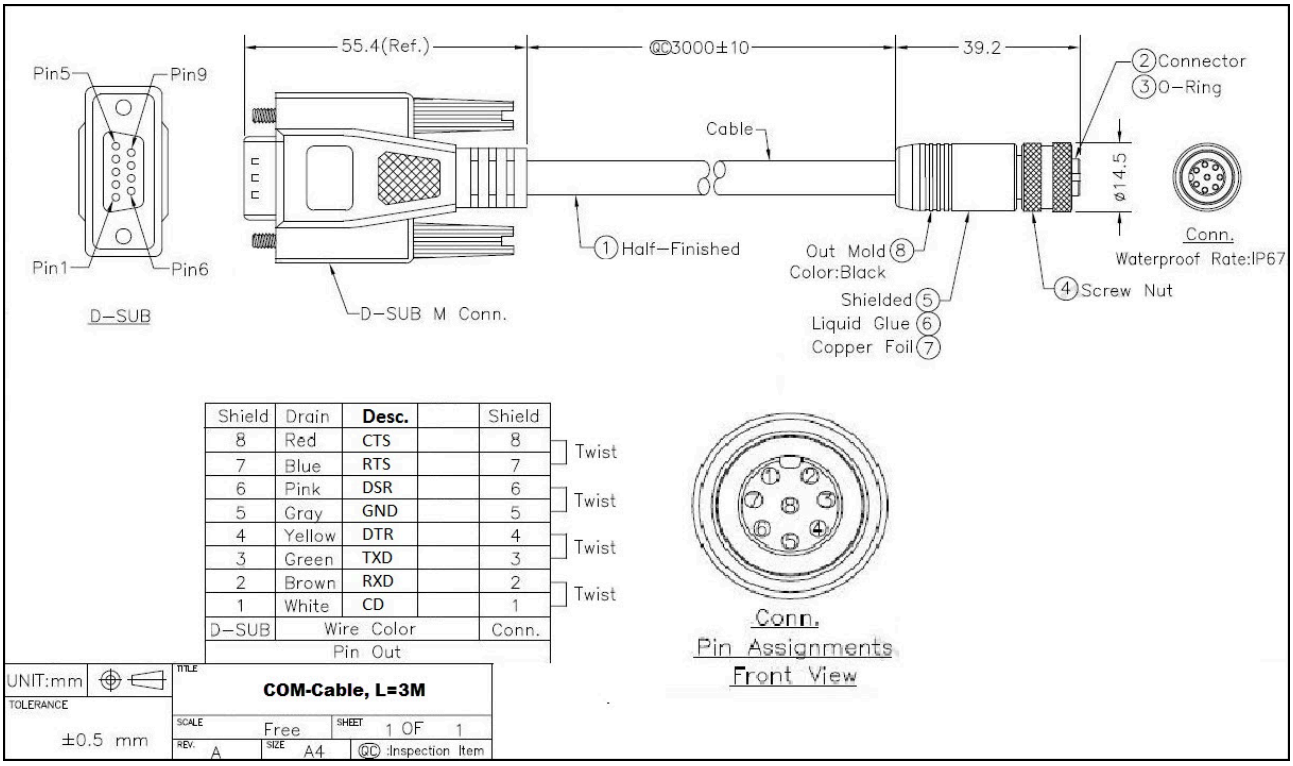

Shield	Drain	Desc.		Shield
8	Red	CTS		8
7	Blue	RTS		7
6	Pink	DSR		6
5	Gray	GND		5
4	Yellow	DTR		4
3	Green	TXD		3
2	Brown	RXD		2
1	White	CD		1
D-SUB	Wire Color			Conn.
Pin Out				

(may not be included in the scope of delivery)

Drawings

Power adapter

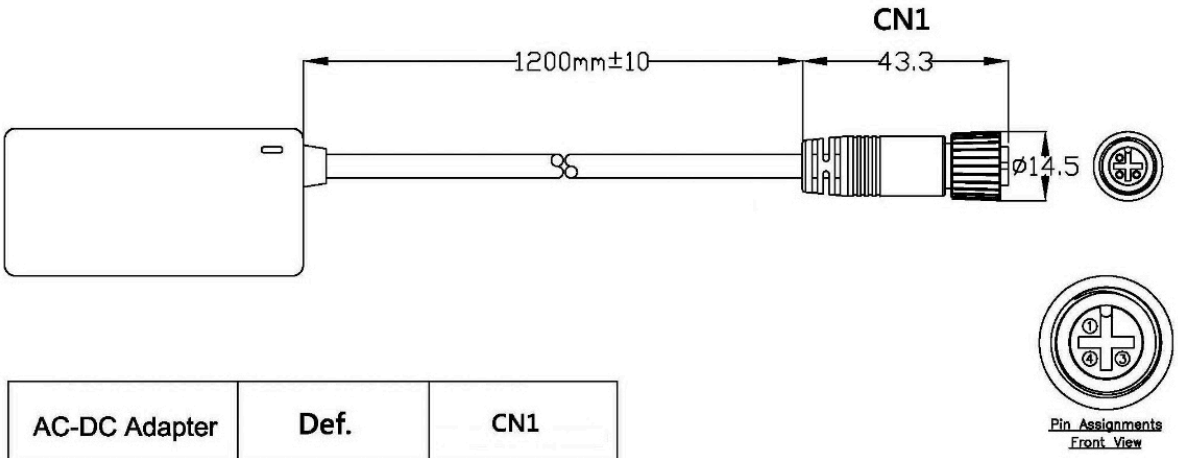

AC-DC Adapter	Def.	CN1
	FG	1
(White)	VCC	3
	GND	4

(may not be included in the scope of delivery)

WACHENDORFF
Prozesstechnik GmbH & Co. KG

Wachendorff Prozesstechnik GmbH & Co. KG
Industriestrasse 7 • 65366 Geisenheim
Germany

Phone: +49 (0) 67 22 / 99 65 - 20
E-Mail: wp@wachendorff.de
www.wachendorff-prozesstechnik.de