WACHENDORFF
Prozesstechnik GmbH & Co. KG

15 inch Panel PC ViTAM-915R
Stainless steel housing

- 15" TFT LCD, 1,024 x 768 pixels
- Resistive touch
- Processor: Intel 4th Gen. Core i3-4010U
- IP66/IP69K stainless steel housing with M12 connections
- Flush frame design
- Fanless cooling system
- Reading angle horizontal 160°, vertical 160

https://www.wachendorff-prozesstechnik.de/en/ViTAM-915R

Description

The ViTAM-9 series is based on an Intel 4th Gen. Core i3-4010U processor.
The industrial panel PCs in this series are available in display sizes from 15" to 24", with either projected capacitive or resistive touch. The projected capacitive touch enables multi-touch operation with a corresponding operating system. If pressure-sensitive operation is required (e.g. with gloves), the resistive touch is the right choice. The front panels are absolutely flush with the stainless steel housing (type 304). The housing is designed in IP69K (incl. IP66) with M12 connection options. An on/off button is also integrated on the side of the Panel PC. The unique fanless thermal design of the robust stainless steel housing enables effective temperature control. The ViTAM IPC can be optionally equipped with a high-brightness LCD and/or optical bonding for an outstanding display, even under the most difficult conditions. In addition, expansion cards for further interfaces or RFID can be integrated.

Product details

Power supply:	9 VDC to 36 VDC Power consumption: max. 24.5 W
Power consumption:	max. 24.5 W
Display:	15" TFT LCD
Resolution:	1,024 x 768 pixels
Aspect ratio:	4:3
Brightness:	420 cd/m²
Colors:	16.7 million
Contrast:	800:1
Reading angle:	H: 160° / V: 160°
Touch screen:	resistive
Processor:	Intel 4th Gen. Core i3-4010U
System Chipset:	SoC
RAM:	4 GB DDR3L RAM 1,600 MHz onboard (optional 8 GB)
SSD/HDD:	1x 2.5" HDD/SSD (standard 32 GB SSD)
Additional memory:	1 x SD slot
Interfaces:	USB: 1 x M12 8-pin (2 x USB 2.0 via cable) with waterproof termination Serial: 1 x M12 8-pin for COM 1 (RS-232/-422/485, default RS-232) with waterproof termination Ethernet: 1 x M12 A-code, 8-pin, socket (female) for Gigabit Ethernet with waterproof termination Other: 1 x On/Off button (on the side, waterproof) Power supply: 1 x M12 3-pin, 1 x On/Off switch (rear) Possible extension: 2 x M12 Available extensions: 2 x USB 2.0 module via TB-528U2 1 x USB 3.0 via cable 1 x LAN via cable 1 x COM port via TB-528C1 1 x CAN via TB-528CAN2 1 x M12 12-pin VGA 1 x HDMI
Expansion slots:	1 x Mini PCIe for Wifi/BT (optional) 1 x RFID module (for front-side use)
Housing:	Stainless steel (type 304, optionally 316)
Assembly:	VESA 75 x 75; yoke mount (swivel fork mount)
Protection class:	IP66/IP69K
Weight:	approx. 7.1 kg
Dimensions (WxHxD):	399 mm x 324 mm x 53 mm
Ambient conditions:	Operation: -20 °C to +60 °C ; Storage: -30 °C to +70 °C 10% to 90 %.rH, non-condensing.
Certifications:	CE/FCC class A
Scope of delivery:	Device 1 x M12 plug-in power supply 1 x M12 USB cable (1x M12 to 2x USB 2.0)
Manufacturer:	Aplex Technology Inc.

Options:	HDMI VGA (M12, 12-pin) Wifi/BT (via Mini PCIe) RFID module (for front-side use) 2 x USB 2.0 module via TB-528U2 1 x USB 3.0 via cable 1 x LAN Gigabit Ethernet via cable 1 x COM port via TB-528C1 1 x CAN via TB-528CAN2 IP65 Waterproof Power Adapter Optical bonding High Brightness LCD (1000 cd/m2) Stainless steel (type 316) Linux, Android, Windows

Drawings

Dimensions (mm):

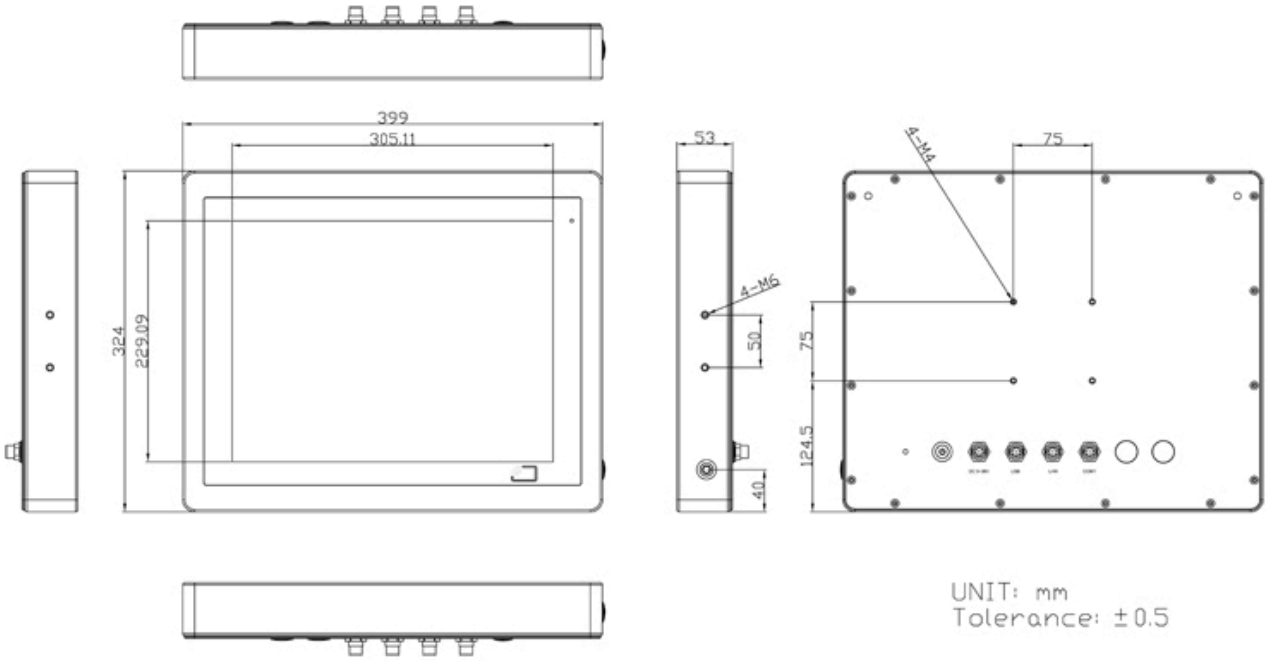

Drawings

LAN cable

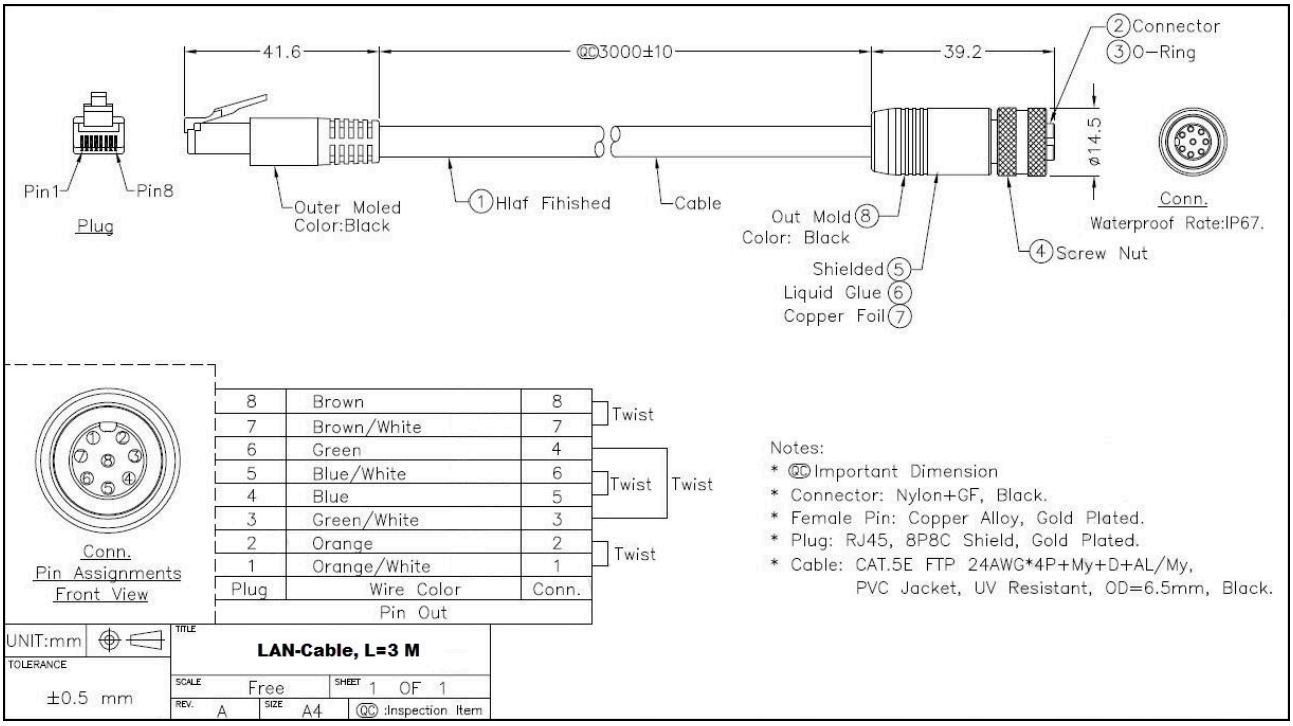

(may not be included in the scope of delivery)

Drawings

USB 3.0 cable

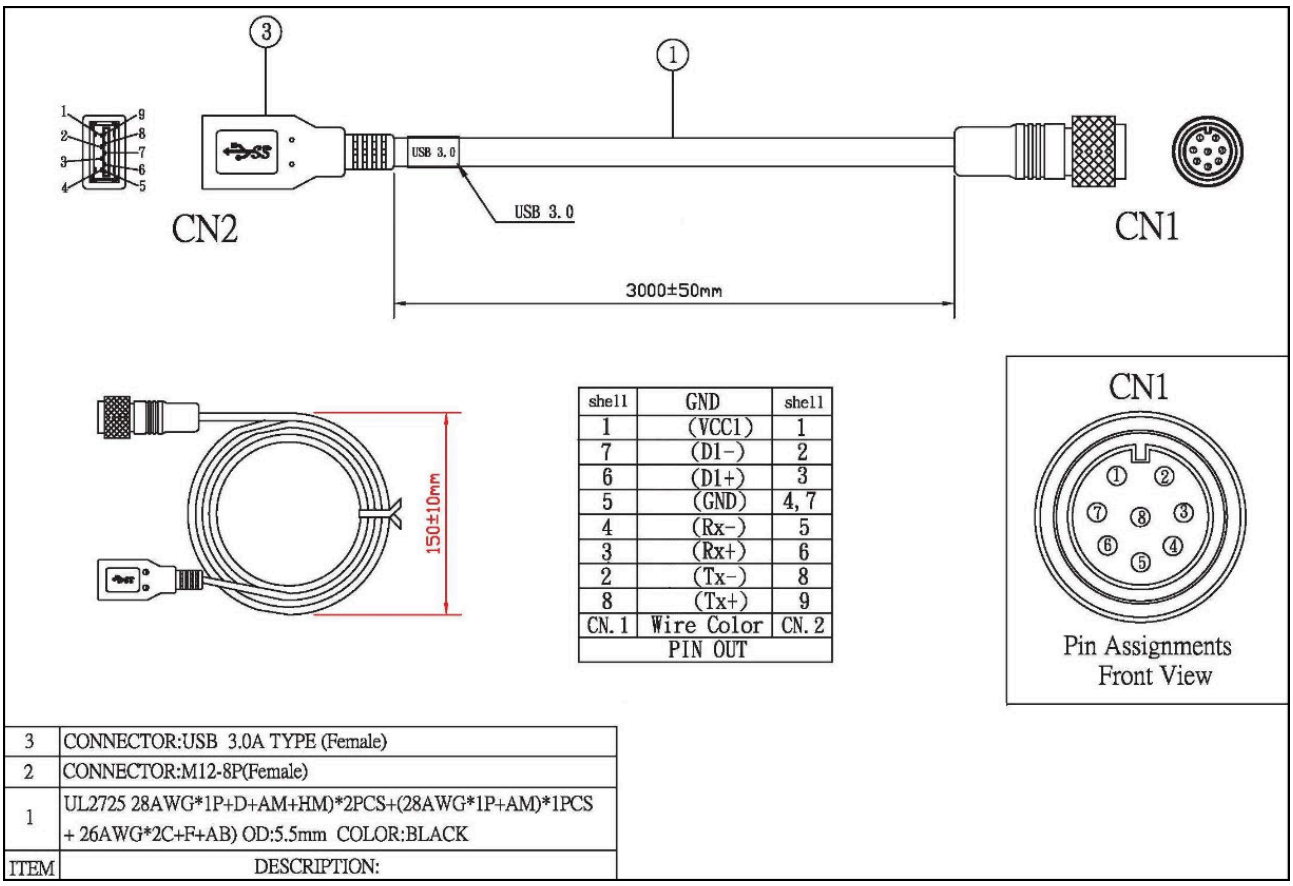

shell	GND	shell
1	(VCC1)	1
7	(D1-)	2
6	(D1+)	3
5	(GND)	4, 7
4	(Rx-)	5
3	(Rx+)	6
2	(Tx-)	8
8	(Tx+)	9
CN. 1	Wire Color	CN. 2
PIN OUT		

3	CONNECTOR:USB 3.0A TYPE (Female)
2	CONNECTOR:M12-8P(Female)
1	UL2725 28AWG*1P+D+AM+HM)*2PCS+(28AWG*1P+AM)*1PCS + 26AWG*2C+F+AB) OD:5.5mm COLOR:BLACK
ITEM	DESCRIPTION:

(may not be included in the scope of delivery)

Drawings

USB Y-cable

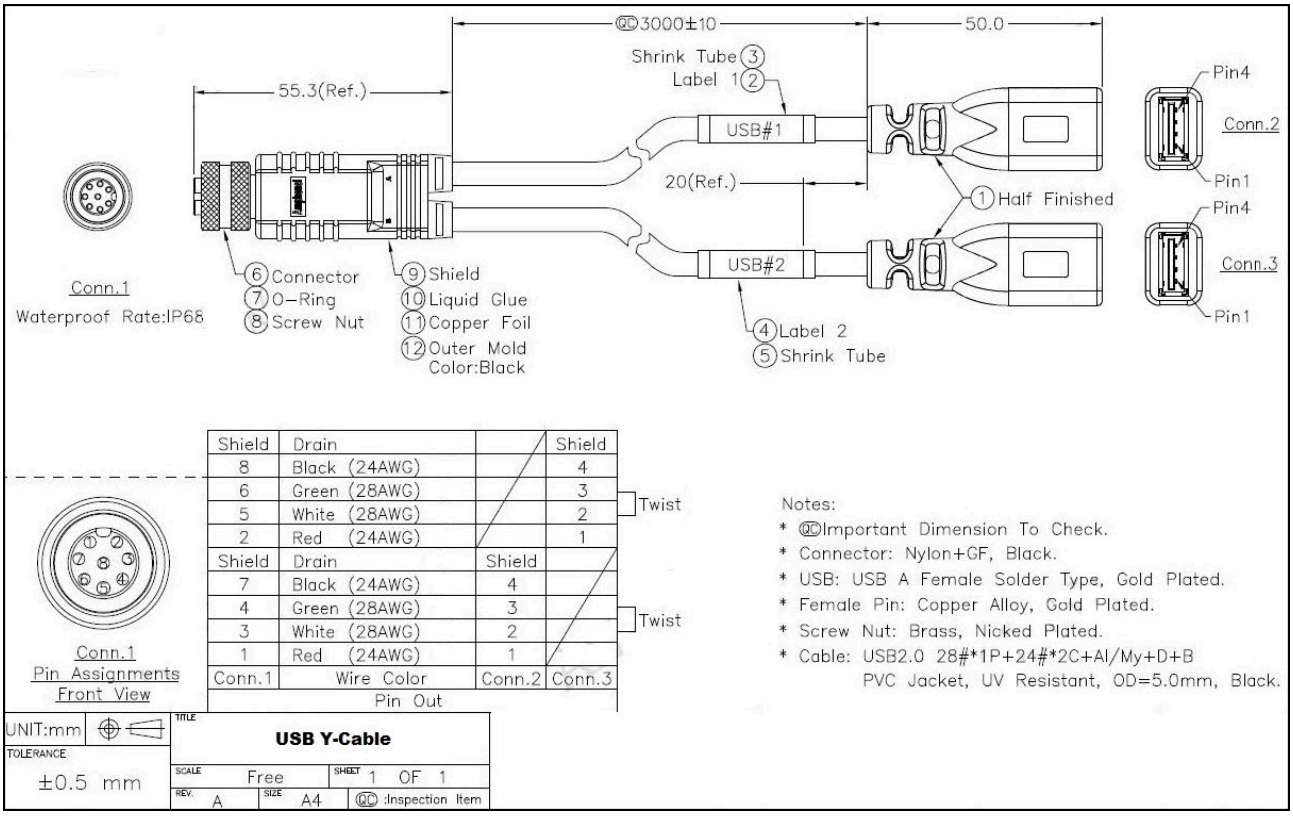

(may not be included in the scope of delivery)

Drawings

COM cable

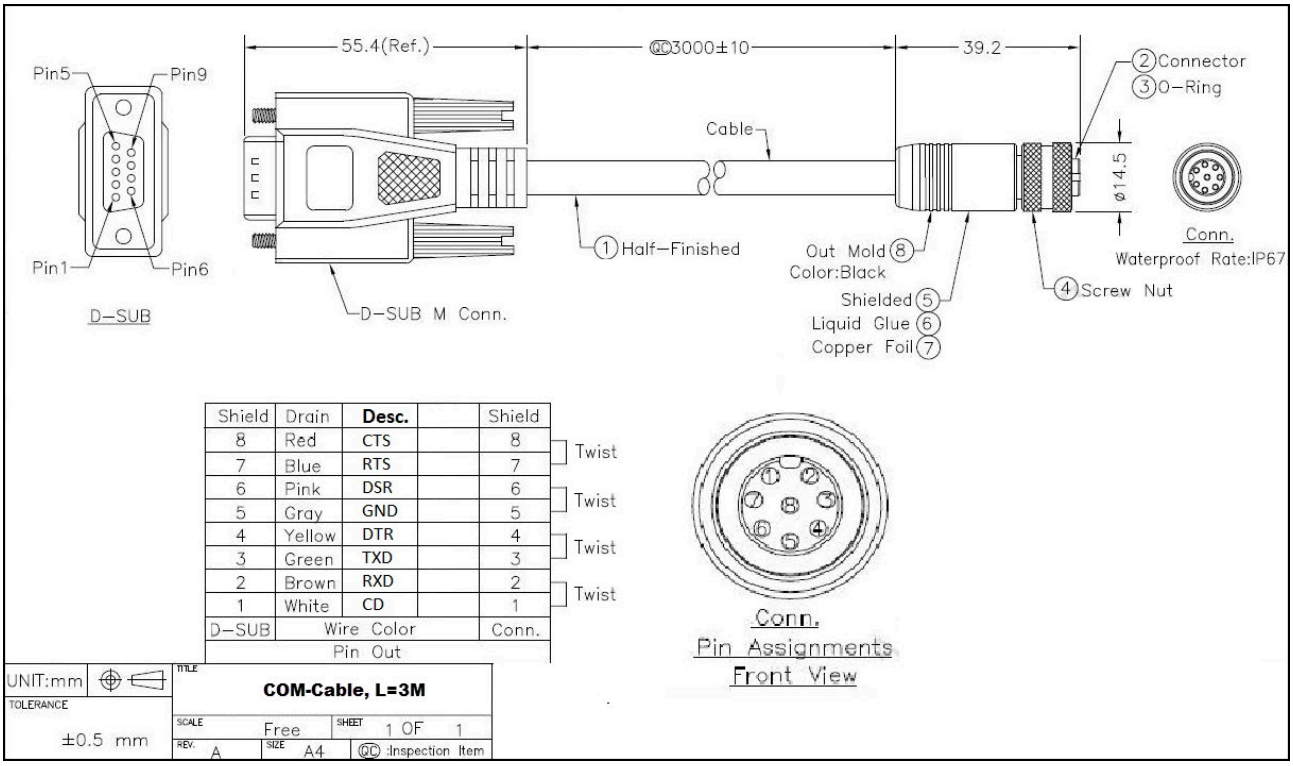

Shield	Drain	Desc.		Shield
8	Red	CTS		8
7	Blue	RTS		7
6	Pink	DSR		6
5	Gray	GND		5
4	Yellow	DTR		4
3	Green	TXD		3
2	Brown	RXD		2
1	White	CD		1
D-SUB	Wire Color			Conn.
Pin Out				

(may not be included in the scope of delivery)

Drawings

Power adapter

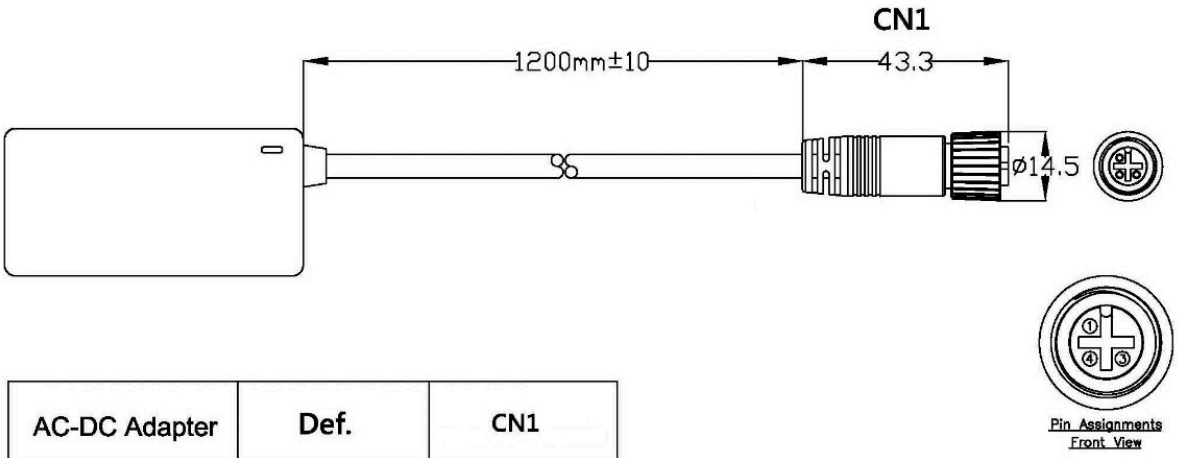

AC-DC Adapter	Def.	CN1
	FG	1
(White)	VCC	3
	GND	4

(may not be included in the scope of delivery)

WACHENDORFF
Prozesstechnik GmbH & Co. KG

Wachendorff Prozesstechnik GmbH & Co. KG
Industriestrasse 7 • 65366 Geisenheim
Germany

Phone: +49 (0) 67 22 / 99 65 - 20
E-Mail: wp@wachendorff.de
www.wachendorff-prozesstechnik.de